Owner's manual

STREETFIGHTER

STREETFIGHTER
STREETFIGHTER S

DUCATI

E

STREETFIGHTER

STREETFIGHTER
STREETFIGHTER S

E

We would like to welcome you among Ducati enthusiasts, and congratulate you on your excellent choice of motorcycle. We think you will ride your Ducati motorcycle for long journeys as well as short daily trips. Ducati Motor Holding S.p.A. wishes you smooth and enjoyable riding.
We are continuously working to improve our Technical Assistance service. For this reason, we recommend that you strictly follow the instructions in this manual, especially those regarding the running-in period. In this way, your Ducati motorbike will surely give you unforgettable emotions.
For any servicing or suggestions you might need, please contact our authorised service centres.
We also provide an information service for all Ducati owners and enthusiasts for any advice and suggestions you might need.

Enjoy your ride!

Note

Ducati Motor Holding S.p.A. cannot accept any liability for errors that may have occurred in the preparation of this manual. All information in this manual is valid at the time of going to print. Ducati Motor Holding S.p.A. reserves the right to make any modifications required due to the ongoing development of their products.
For your safety, as well as to preserve the warranty, reliability and worth of your motorcycle, use original Ducati spare parts only.

Warning

This manual forms an integral part of the motorcycle and - if the motorcycle is resold - must always be handed over to the new owner.

E

Table of contents

General 7
Warranty 7
Symbols 7
Useful information for safe riding 8
Carrying the maximum load allowed 9
Identification data 10

Instrument panel (Dashboard) 11
Instrument panel 11
LCD unit functions 13
LCD - Parameter setting/display 15
Total distance covered indicator: “Odometer“ 18
Vehicle speed indication 19
Engine coolant temperature indicator 20
“TRIP“ meter 21
Distance travelled on fuel reserve: “TRIP FUEL“ 22
Clock display indicator 23
Air temperature indicator 24
Maintenance indicator 25
Battery voltage indicator (BAT) 26
Engine idle RPM setting (RPM) 27
Backlighting setting (LIGHT SET) 28
LAP timer 29
Stored data display (LAP Memory) 31
DDA data logger 32
Erase DDA 33
Function for activation/deactivation of DTC (Ducati Traction Control) 34
Activation of the system 35
DTC (Ducati Traction Control) setting function 36
Tips on how to select the sensitivity level 38
Tips for use on the track 39
Tips for use on the road 39
Clock setting function 40
Instrument panel diagnostics 41
Turn indicators automatic “RESET” function 46
Headlight “gradual” SWITCH-ON 46
Headlight “smart” auto-off 46
The immobilizer system 47
Keys 47
Code Card 48
Immobilizer override procedure 49
Operation 51
Duplicate keys 51
Service menu - unit of measurement (UNIT SET) 52

Controls 54
Position of motorcycle controls 54
Key-operated ignition switch and steering lock 55
Lh switch 56

Clutch lever 57
RH switch 58
Throttle twistgrip 58
Front brake lever 59
Rear brake pedal 60
Gear change pedal 60
Setting the gear change and rear brake pedals 61

Main components and devices 63
Position on the vehicle 63
Fuel tank plug 64
Seat latch 65
Side stand 66
Steering damper 67
Front fork adjusters 68
Rear shock absorber adjusters 70
Changing motorcycle setup 72

Directions for use 74
Running-in recommendations 74
Pre-ride checks 76
Starting the engine 77
Moving off 79
Braking 79
Stopping the motorcycle 80
Parking 80
Refuelling 82
Tool kit and accessories 83
USB data logger (only for Streetfighter S) 84

Main maintenance operations 85
Changing the air filter 85
Checking and topping up coolant level 85
Checking brake and clutch fluid level 86
Checking brake pads for wear 88
Lubricating cables and joints 89
Adjusting throttle control free play 90
Charging the battery 91
Checking drive chain tension 92
Chain lubrication 93
Replacing the high and low beam bulbs 94
Rear turn signals 95
Number plate light 95
Beam setting 96
Tubeless tyres 98
Checking engine oil level 100
Cleaning and replacing the spark plugs 101
Cleaning the motorcycle 102
Storing the bike away 103
Important notes 103

Maintenance 104
Scheduled maintenance chart: operations to be performed by the dealer 104
Scheduled maintenance chart: operations to be performed by the customer 107

Technical data 108
Overall dimensions (mm) 108

E

Weights 108
Engine 110
Timing system 110
Performance data 111
Spark plugs 111
Fuel system 111
Brakes 112
Transmission 113
Frame 114
Wheels 114
Tyres 114
Suspensions 114
Exhaust system 115
Available colours 115
Electric system 115

Routine maintenance record 120

For United States of America version Only 121

Routine maintenance record 131

General

Warranty

In your own interest, and in order to guarantee product reliability, you are strongly advised to refer to our authorised Dealers and Service Centers for any servicing requiring particular technical expertise.
Our highly skilled staff have access to the implements required to perform any servicing job at best, and use Ducati original spare parts only as the best guarantee for full interchangeability, smooth running and long life.

All Ducati motorcycles come with a "Warranty Card". However, warranty does not apply to the motorcycles used in competitions or competitive trials. No motorcycle part may be tampered with, altered, or replaced with parts other than original Ducati spare parts during the warranty period, or the warranty right will be automatically invalidated.

Symbols

Ducati Motor Holding S.p.A. advises you to read this manual carefully in order to become familiar with your motorcycle. In case of any doubts, please call a Dealer or authorised Service Center. The information contained herein will prove useful on your trips - and Ducati Motor Holding S.p.A. wishes you smooth, enjoyable riding - and will help you keep the performance of your motorcycle unchanged for a long time. This manual contains some special remarks:



Warning

Failure to comply with these instructions may put you at risk and lead to severe injury or death.



Important

Possibility of damaging the motorcycle and/or its components.



Note

Additional information concerning the job being carried out.

The terms RIGHT and LEFT are referred to the motorcycle viewed from the riding position.

E

Useful information for safe riding

Warning

Read this section before riding your motorcycle.

Accidents are frequently due to inexperience. Always make sure you have your licence with you when riding; you need a valid licence to be entitled to ride your motorcycle.
Do not lend your motorcycle to inexperienced riders or who do not hold a valid licence.
Both rider and pillion passenger must ALWAYS wear a safety helmet.
Wear proper clothing, with no loose items or accessories that may become tangled in the controls or limit your zone of vision.
Never start or run the engine indoors. Exhaust gases are poisonous and may lead to loss of consciousness or even death within a short time.
Both rider and pillion passenger should keep their feet on the footpegs when the motorcycle is in motion.
ALWAYS hold the handlebars firmly with both hands so you will be ready for sudden changes of direction or in the road surface. The pillion passenger should ALWAYS hold on to the strap onto passenger seat with both hands.
Ride within the law and observe national and local rules.
ALWAYS respect speed limits where these are posted.
However, ALWAYS adjust your speed to the visibility, road and traffic conditions you are riding in.
ALWAYS signal your intention to turn or pull to the next lane in good time using the suitable turn signals.
Be sure you are clearly visible and do not ride within the blind spot of vehicles ahead.
Be very careful when tackling road junctions, or when riding in the areas near exits from private grounds, car parks or on slip roads to access motorways.
ALWAYS turn off the engine when refuelling.
Be extremely careful not to spill fuel on the engine or on the exhaust pipe when refuelling.
Do not smoke when refuelling.
While refuelling, you may inhale noxious fuel vapours.
Should any fuel drops be spilled on your skin or clothing, immediately wash with soap and water and change your clothing.
ALWAYS remove the key when you leave your motorcycle unattended.
The engine, exhaust pipes, and mufflers stay hot for a long time.

Warning

The exhaust system might be hot, even after engine is switched off; pay particular attention not to touch exhaust system with any body part and do not park the vehicle next to inflammable material (wood, leaves etc.).

Park your motorcycle where no one is likely to hit it and use the side stand.
Never park on uneven or soft ground or your motorcycle may fall over.

Carrying the maximum load allowed

Your motorcycle is designed for long-distance riding, carrying the maximum load allowed in full safety.
Even weight distribution is critical to preserving these safety features and avoiding trouble when performing sudden manoeuvres or riding on bumpy roads.

Information about carrying capacity

The total weight of the motorcycle in running order including rider, passenger, luggage and additional accessories should not exceed:
390 kg.

Arrange your luggage or heavy accessories in the lowest possible position and close to motorcycle centre.
Be sure to secure the luggage to the supports provided on the motorcycle as firmly as possible. Improperly secured luggage may affect stability.
Never fix bulky or heavy objects to the handlebar or to the front mudguard as this would affect stability and cause danger.
Do not insert any objects you may need to carry into the gaps of the frame as these may foul moving parts.
Make sure the tyres are inflated to the proper pressure indicated at page 98 and that they are in good condition.

E

Identification data

All Ducati motorcycles have two identification numbers, for frame (fig. 1) and engine (fig. 2).

Frame number

Engine number

Note

These numbers identify the motorcycle model and should always be indicated when ordering spare parts.

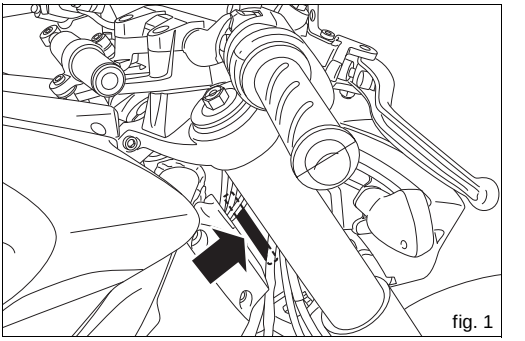

fig. 1

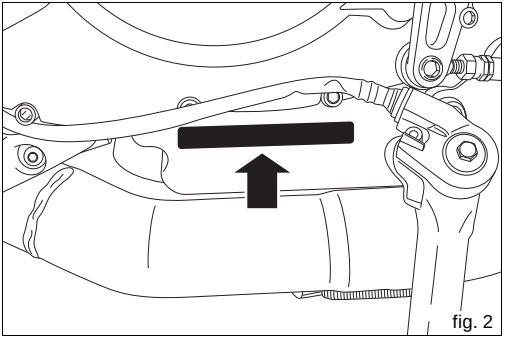

fig. 2

Instrument panel (Dashboard)

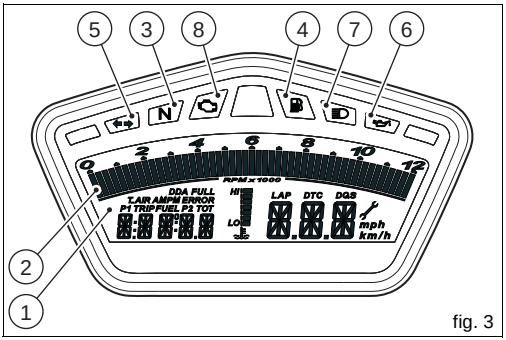

fig. 3

Instrument panel

1) LCD, (see page 13).
2) REVOLUTION COUNTER (rpm).
Shows the engine rotation speed/minute.
3) NEUTRAL LIGHT N (GREEN).
Comes on when in neutral position.
4) FUEL WARNING LIGHT (AMBER YELLOW).
Comes on when fuel is low and there are about 2 litres of fuel left in the tank.
5) TURN SIGNAL LIGHTS ⇦⇨ (GREEN).
Comes on flashing when the turn indicators are on.
6) ENGINE OIL PRESSURE LIGHT (RED).
Comes on when engine oil pressure is too low. It briefly comes on when the ignition is switched to ON and normally goes out a few seconds after engine starts.
It may shortly come on when the engine is hot, however, it should go out as the engine revs up.

Important
If this light (6) stays on, stop the engine or it may suffer severe damage.

7) HIGH BEAM LIGHT (BLUE).
Comes on when high beam is on.
8) "VEHICLE/ENGINE DIAGNOSIS- EOBD" LIGHT (AMBER YELLOW).
When on, this light is used by the control unit to signal the presence of "Engine" and/or "Vehicle" errors and sometimes the consequent engine disabling.

E

9) REV LIMITER LIGHT - OVER REV (RED)
Light 9B + 9C: These lights come on steady at 400 rpm below the limiter threshold.
Light 9A + 9B + 9C: These lights come on steady at 800 rpm below the limiter threshold.
Light 9A + 9B + 9C: they start flashing when the rev limiter is reached.
10) TRACTION CONTROL LIGHT (RED) (fig. 4)
Light 10B + 10C: With DTC active, these lights turn on when driving torque is slightly reduced by the system.
Light 10A + 10B + 10C: With DTC active, these lights turn on when driving torque is considerably reduced by the system.
11) CONTROL SWITCH (fig. 5)
Button used to display and set instrument panel parameters "▲".
12) CONTROL SWITCH (fig. 5)
Button used to display and set instrument panel parameters "▼".
13) HIGH-BEAM FLASH BUTTON FLASH (fig. 5)
The high-beam flasher button may also be used to control the LAP functions and the instrument panel DDA data logger.
14) TURN INDICATORS OFF BUTTON (fig. 5)
The turn indicators off button may also be used to RESET/ CONFIRM function selections on the instrument panel.

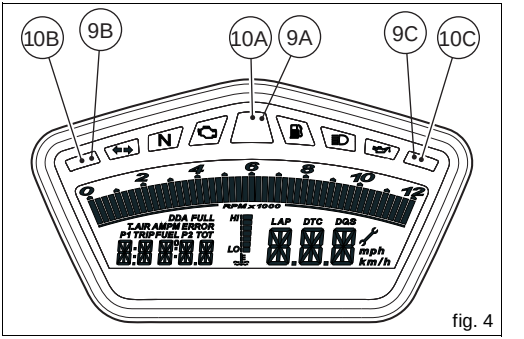

fig. 4

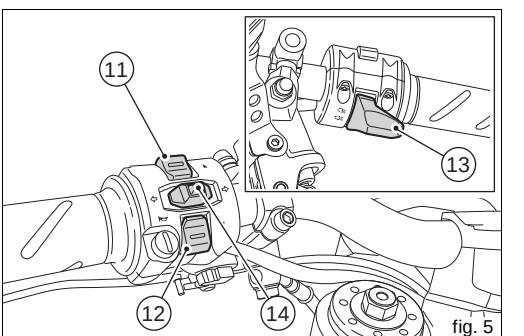

fig. 5

LCD unit functions

Warning

Stop the motorcycle before using the instrument panel controls. Never operate the instrument panel controls while riding.

1) SPEEDOMETER.
Gives road speed.
2) ODOMETER.
Gives total distance covered.
3) Trip meter.
This function indicates the distance covered since the meter was last reset (TRIP).
4) TRIP FUEL METER.
Gives total distance travelled on fuel reserve.
5) CLOCK.
6) LAP TIMER.
7) ENGINE RPM INDICATOR (RPM).
8) LAP TIMER, MAX. RPM (LAP) AND LIMITER STATE (IF REACHED).
9) BATTERY VOLTAGE INDICATOR (BATT).
10) AIR TEMPERATURE INDICATOR.
11) WATER TEMPERATURE INDICATOR.
This function indicates engine coolant temperature.

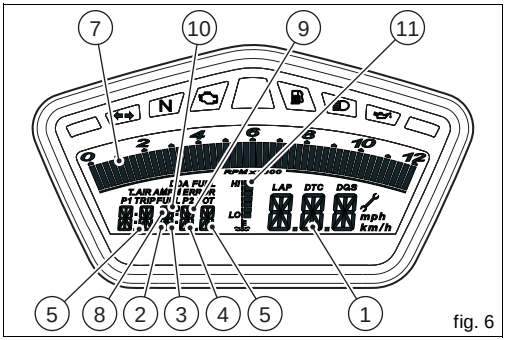

fig. 6

Important

Never use the vehicle when the temperature reaches max. value or the engine might damage.

E

12) MAINTENANCE COUNTER INDICATOR.
This indicator comes on to indicate that the vehicle is due for service.
It stays on until it is RESET at a Ducati Dealer or authorised Service Centre as part of the service procedure.
13) LAP FUNCTION.
Indicates activation of the LAP function.
14) DDA FUNCTION.
Indicates activation of the DDA function.
15) TRACTION CONTROL (DTC).
Indicates activation of the DTC system control unit.

Important

The instrument panel allows the diagnosis of the electronic ignition/injection system. If you accidentally access a restricted menu, do not under any circumstances attempt to use it, but turn the ignition key to OFF. Contact a Ducati Dealer or authorised Service Centre for the necessary inspections.

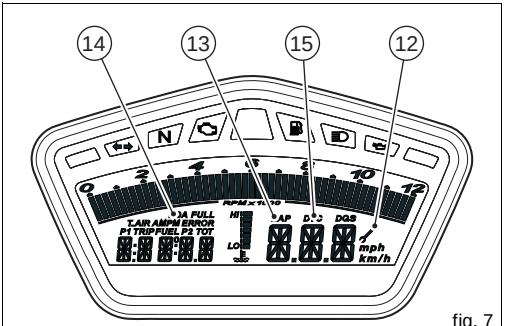

fig. 7

LCD - Parameter setting/display

When the key is turned from OFF to ON, the instrument panel turns on all LCD digits for one second and all warning lights one by one.

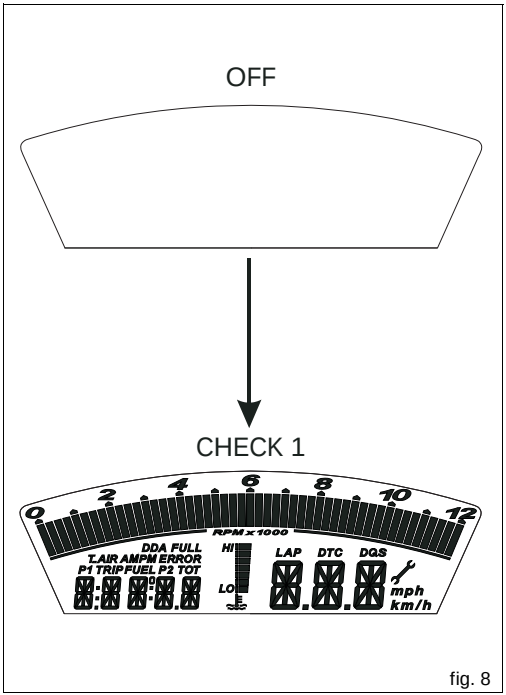

fig. 8

E

It then switches to “normal“ display mode showing the model indication in place of the odometer and, for 2 seconds, even the version (EU, UK, USA, CND, FRA, JAP) in place of the road speed readout.
Model is displayed once as scrolling text.

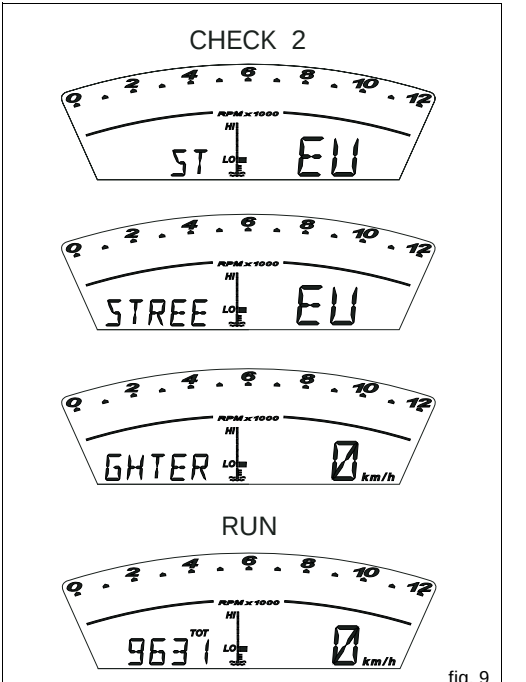

fig. 9

Upon Key-On, the dashboard always displays the following information (and any functions activated previously are deactivated, apart from the Traction Control, when active):
ODOMETER
SPEED
RPM BARGRAPH
ENGINE COOLANT TEMPERATURE BARGRAPH

With the button (1, fig. 10) "▲", the ODOMETER READOUT (TOT) will cycle through the following functions:
TRIP
TRIP FUEL (only if active)
CLOCK
T_AIR
DTC (available only if Traction Control is fitted and active)
until cycling back to the ODOMETER (TOT) function.

Pressing button (2, fig. 10) "▼" gives access to the MENU and the following functions are displayed one after another:
ERROR (only if at least one error is present)
BATT
RPM
LIGHT SET
LAP (OFF or ON)
LAP MEM
DDA (OFF or ON)
ERASE DDA

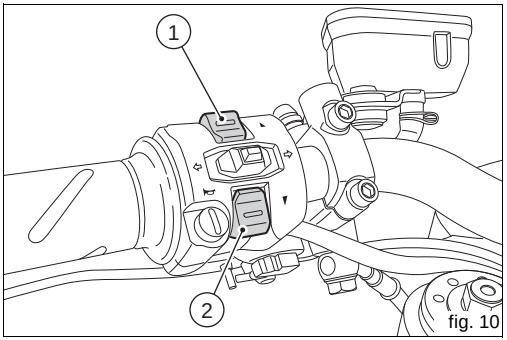

fig. 10

DTC OFF/ON (active only if Traction Control is fitted)
DTC SETUP (active only if DTC has been activated)
TIME SET
CODE (only if active)

Important

This menu is active only if the speed of the motorcycle is less than 20 km/h. If this menu is open and the speed of the motorcycle exceeds 20 km/h, the instrument panel automatically exits the menu and returns to the initial display. It is possible to exit the MENU at any time, however, by pressing switch (2, fig. 10) "▼" for 3 seconds.

E

Total distance covered indicator: “Odometer“

This function shows the total distance covered by the vehicle.
Upon Key-On, the system automatically enters this function.
The odometer reading is stored permanently and cannot be reset.
If the distance travelled exceeds 99999 km (or 99999 miles), the value “99999” will be displayed permanently.

EU, CND, FRA, JAP versions

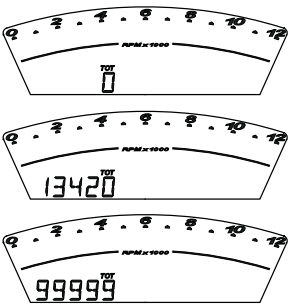

UK, USA versions

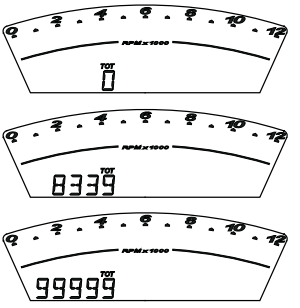

fig. 11

Vehicle speed indication

This function shows vehicle speed.
Speed indication is obtained from actual speed information (in km/h) from the ECU increased by 8%.
Maximum speed displayed is 299 km/h (186 mph).
Over 299 km/h (186 mph) the display will show a series of dashes "- - -" (steadily lit - not flashing).

EU, CND, FRA, JAP versions

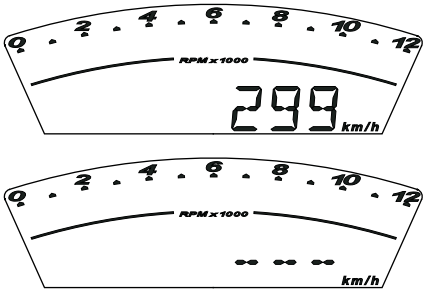

UK, USA versions

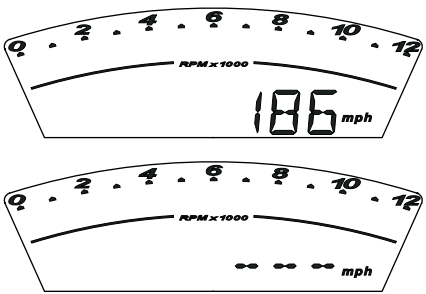

fig. 12

E

Engine coolant temperature indicator

This function indicates coolant indication state.

Possible display modes:

- if value is below +40 °C the instrument panel will set to display “STATE 2”;
- if value is between +40 °C and +120°C the instrument panel progressively sets to states “3”, “4”, “5”, “6”, “7”, “8”, as far as temperature increases;
- if value is over +120 °C the instrument panel will set to display “STATE 9” with flashing elements;
- In case of sensor FAULT, “STATE 1” is displayed flashing.

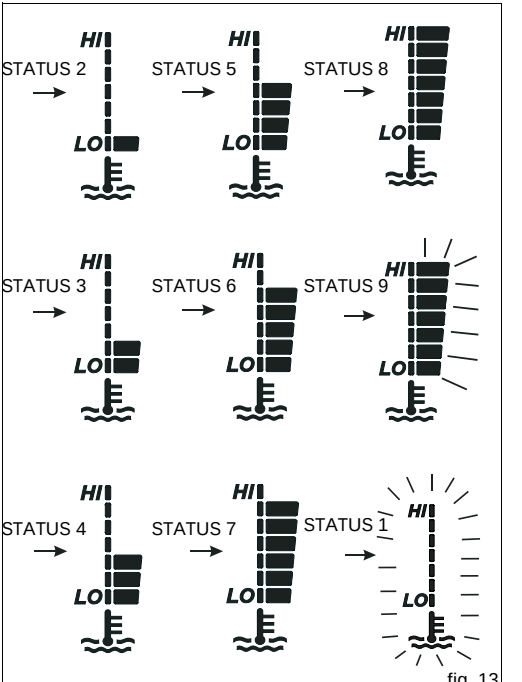

fig. 13

“TRIP“ meter

This function shows the distance travelled since the Trip meter was last reset.
Holding button (14, fig. 5) pressed for 3 seconds when this function is displayed resets the trip meter.
When the reading exceeds 999.9, distance travelled is reset and the meter automatically starts counting from 0 again.

EU, CND, FRA, JAP versions

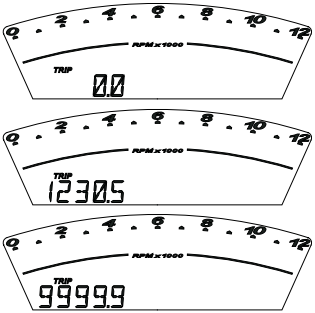

UK, USA versions

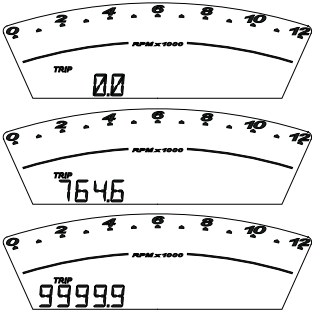

fig. 14

E

Distance travelled on fuel reserve: “TRIP FUEL“

This function shows the distance travelled on fuel reserve.
When the fuel light comes on, the display automatically switches to the “TRIP FUEL“ indicator.
Trip fuel reading remains stored even after Key-Off until the vehicle is refuelled.
Count is interrupted automatically as soon as fuel is topped up to above minimum level.
When the reading exceeds 999.9, distance travelled is reset and the meter automatically starts counting from 0 again.

EU, CND, FRA, JAP versions

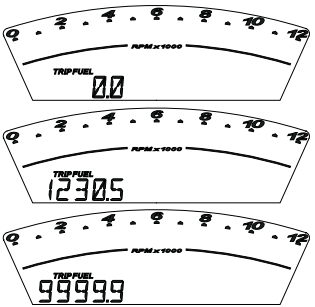

UK, USA versions

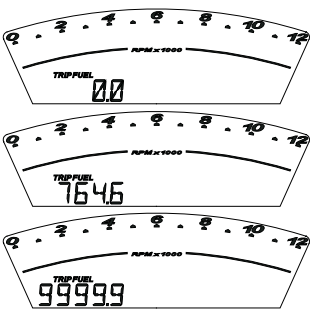

fig. 15

Clock display indicator

This function shows the time.
Time is always displayed as follows:
AM from 0:00 to 11:59
PM from 12:00 to 11:59

If battery power is suddenly cut off (Batt-OFF), when battery power is restored and upon next Key-On, the clock is reset and restarts operating from “0:00“.

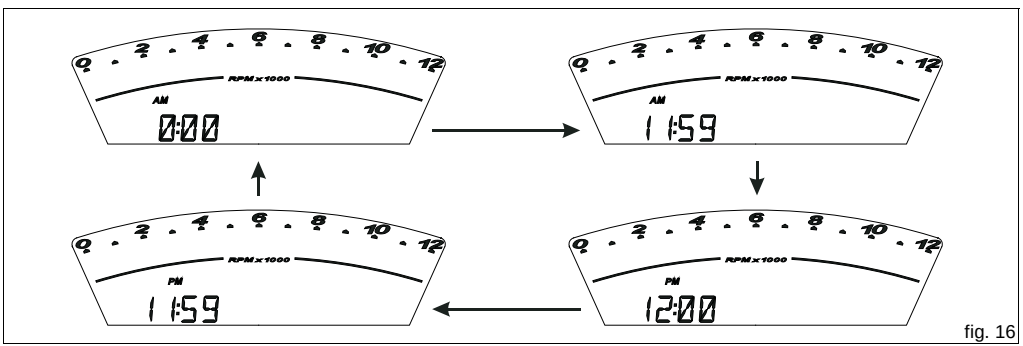

fig. 16

E

Air temperature indicator

This function shows the external temperature.
Display limits: -39°C ÷ +124°C
In the event of a sensor FAULT (-40°C,+125°C or disconnected), a string of dashes "- - -" (not flashing) is displayed and the "Vehicle/Engine Diagnosis - EOBD" light (8, fig. 3) comes on and an error is indicated inside "ERRORS" Menu.

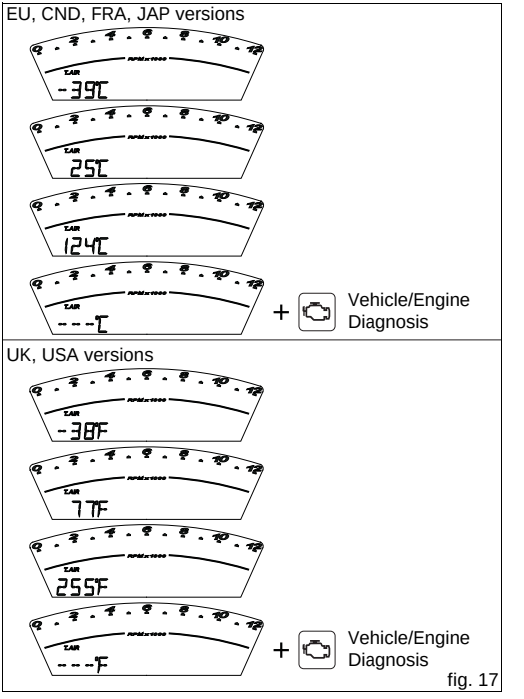

fig. 17

Maintenance indicator

It shows service intervals (service).
Indicator ( ) comes on to indicate that the vehicle is due for service.
The dashboard shows the service reminder at the following intervals:
after the first 1000 km on the odometer;
every 12000 km on the odometer.
The indication remains displayed until it is reset.
When the message appears, contact an authorised dealer or service centre.

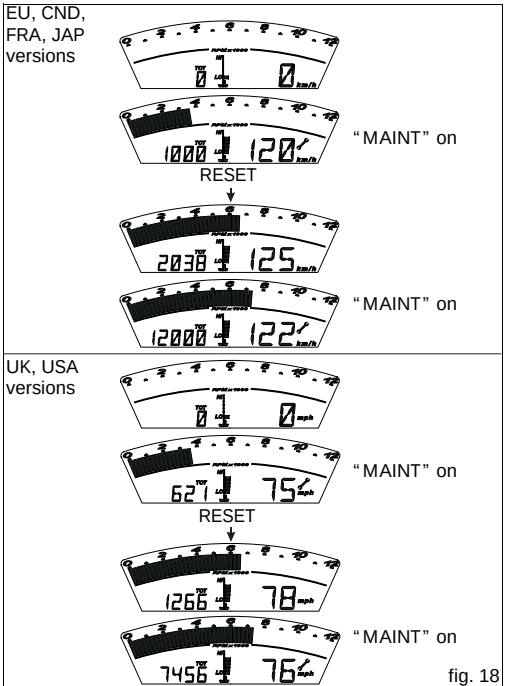

fig. 18

E

Battery voltage indicator (BAT)

This function provides battery voltage indication.
To view this function, access the menu and enter the "BAT" page.
The dashboard shows battery voltage indication as follows:

- if voltage is between 12.1 and 14.9 Volt, the reading is on steady;
- if voltage is between 10.0 and 12.0 Volt or between 15.0 and 16.0 Volt, the reading will be flashing;
- if voltage is 9.9 Volt or less, the word "LO" is shown flashing and the Vehicle/Engine Diagnosis light (EOBD) (8, fig. 3) comes on;
- if voltage is = 16.1 Volt or higher, the word "HI" is shown flashing and the "Vehicle/Engine Diagnosis- EOBD" light (8, fig. 3) comes on.

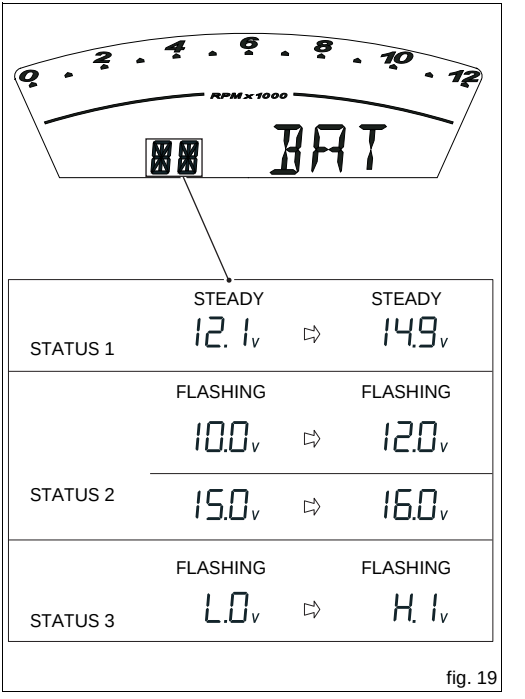

fig. 19

Engine idle RPM setting (RPM)

This function describes engine idle setup.
To view this function, access the “RPM“ page of the menu.
In addition to the rev counter scale at the top, the dashboard displays engine rpm as a numeric value for improved accuracy when setting idle rpm.

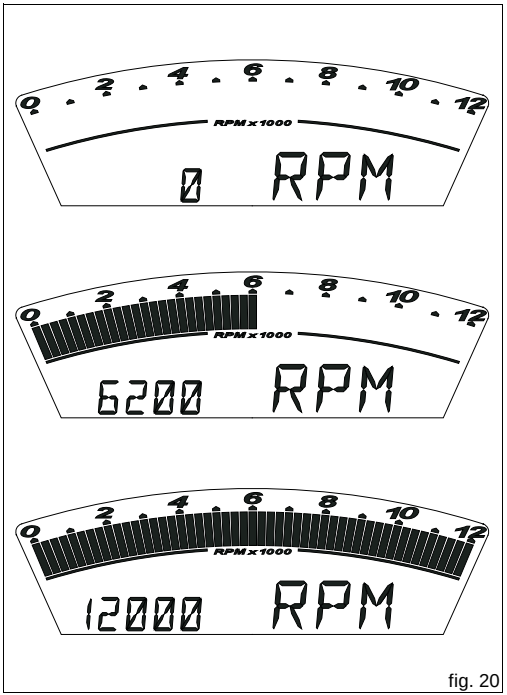

fig. 20

E

Backlighting setting (LIGHT SET)

This function allows dashboard backlighting setting.
To enable this function, access the "LIGHT SET" page of the menu.
From this page, press the RESET button (14, fig. 5) for 3 seconds to enter setup mode; the following pages are displayed one after the other:
Page 1 - "LIGHT MAX" set up:
With this option, backlighting is at maximum power; press switch (1, fig. 10) "▲" to go to page 2.
Page 2 - "LIGHT MID" set up:
With this option, backlighting is about 30% less than maximum power; press switch (1, fig. 10) "▲" to go to page 3.
Page 3 - "LIGHT MIN" set up:
With this option, backlighting is about 70% less than maximum power; press switch (1, fig. 10) "▲" to return to page 1.

If you press the RESET button (14, fig. 5) for 3 seconds within these three pages, the dashboard goes back to "LIGHT SET" starting page and stores selected backlighting setup.

If battery power is suddenly cut off (Batt-OFF), when battery power is restored and upon next Key-On, the backlighting setting is set to maximum.

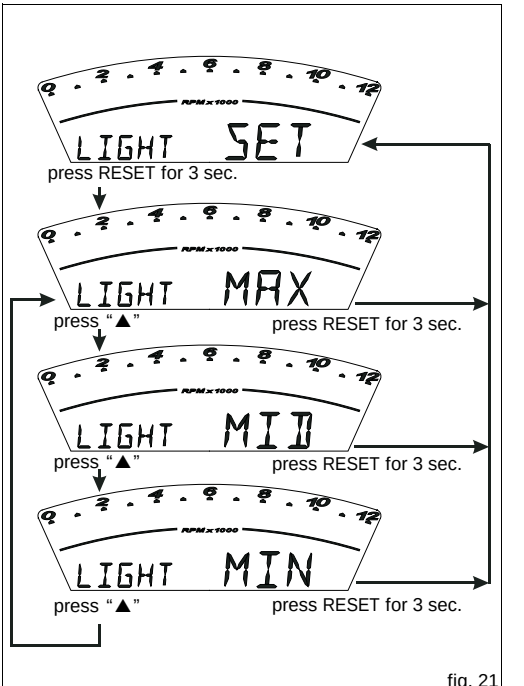

fig. 21

LAP timer

This function lets you display lap times.
To enable this function, enter the menu and set the LAP function to “On“ by holding RESET button (14, fig. 5) pressed for 3 seconds.
The lap timer is started and stopped using the high-beam flasher button FLASH (13, fig. 5) on the LH switch.
Each time the FLASH button is pressed when the LAP function is active, the dashboard will display lap time for 10 seconds and then revert to “normal“ display mode.
Up to 30 lap times can be stored.
When the memory is full, each time the FLASH button is pressed the word “FULL“ is shown flashing for 3 seconds instead of lap time until stored times are reset.

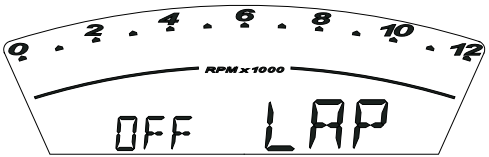

press RESET for 3 sec.

press RESET for 3 sec.

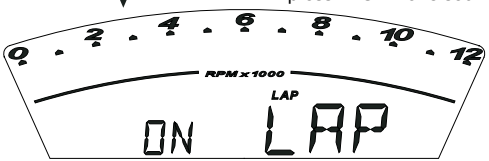

fig. 22

E

When the LAP function is set to Off in the menu, the current "lap" is not stored.
The LAP function is disabled automatically if the key is turned to Off (Key-Off) while it is active and the current "lap" is not stored even though the lap timer had been active before Key-Off.
If the lap timer is not stopped, it will roll over upon reaching 9 minutes, 59 seconds and 99 hundredths; the lap timer starts counting from 0 (zero) and will keep running until the function is disabled.
If the LAP function is enabled without resetting the "memory" and there are less than 30 laps stored in the memory (for instance: 18 laps stored), the dashboard will store new laps until the memory is full (in this instance, 12 more laps).
This function only displays lap times; display of other information stored (MAX RPM, limiter threshold reached) is provided by the Lap Memory function.

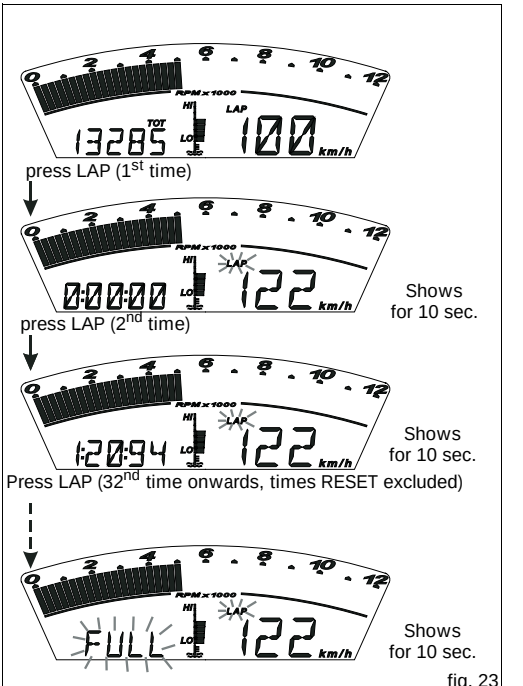

fig. 23

Stored data display (LAP Memory)

Displays data stored using the LAP function: lap time, MAX RPM and rev limiter, if kicked in.

To view stored lap times, enter the menu and go to page "LAP MEM".

Holding the RESET button (14, fig. 5) pressed for 3 seconds in this menu page accesses the "1st lap" view mode. the dashboard will show lap number, lap time, and MAX RPM reached during that lap.

Press button (1, fig. 10) "▲" repeatedly to scroll through the 30 laps stored until returning to the 1st lap.

If you press the RESET button (14, fig. 5) for 3 seconds while the saved times are displayed, the instrument panel immediately resets all the saved times; and the LAP function is disabled automatically if active.

If the memory is empty, the display shows the 30 times, with the lap timer reading "00.00.00", MAX RPM = 0 and MAX speed = 0.

If the engine reached one of the two thresholds before the limiter or the limiter threshold during a lap, the corresponding lights (9, fig. 3) come on while viewing stored lap times.

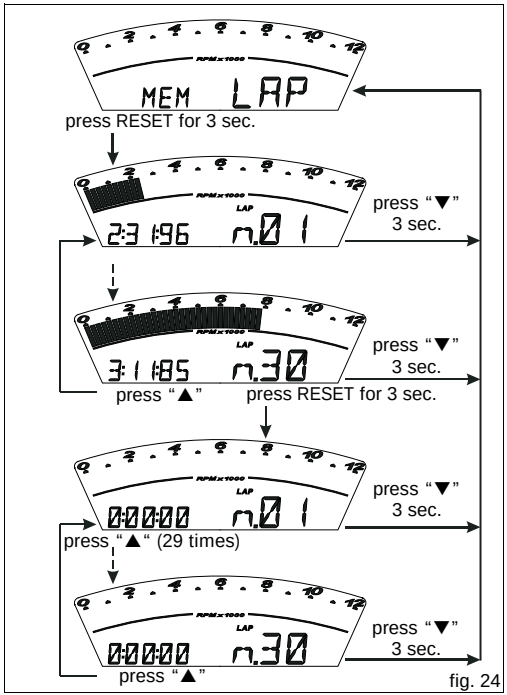

fig. 24

DDA data logger

This function activates the DDA (Ducati Data Analyzer) (ref. page 84): the data logger must be connected to vehicle wiring.
To enable this function, enter the menu and set "DDA" data logger to "On" by holding RESET button (14, fig. 5) pressed for 3 seconds.
To confirm that function is active, "DDA" turns on (small message) and will always be visible even out of the menu pages.
The START/STOP control for the data logger lap separator is the high-beam flasher button FLASH (13, fig. 5) on the LH switch.
The DDA function is disabled automatically if the key is turned to Off (Key-Off) while it is active.

Note

Online assistance is available to Ducati Data Analyzer (DDA) owners (http://dda.prosa.com). This service will provide anything necessary to correctly use the DDA with your PC: both for the device and the software for analysing the recorded data.

Warning

After use, disconnect the DDA from the main wiring harness.

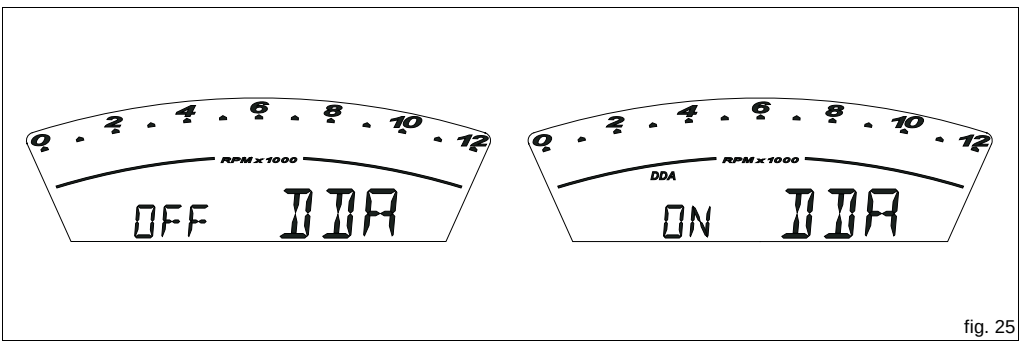

fig. 25

Erase DDA

This function lets you erase the data saved to the DDA data logger: the data logger must be connected to vehicle wiring. To erase data, enter the menu page “Erase DDA“.
If you press the RESET button (14, fig. 5) for 3 seconds and the DDA is not acquiring data, the message “WAIT…” is displayed on the instrument panel for 10 seconds; after these 10 seconds, message “ERASE OK“ is displayed for 2 seconds to confirm that the data in the DDA data logger have been erased.
If RESET button (14, fig. 5) is held depressed for 3 seconds while the DDA data logger is acquiring data, data logger memory is not erased and the dashboard displays message “FAIL“ for 2 seconds.

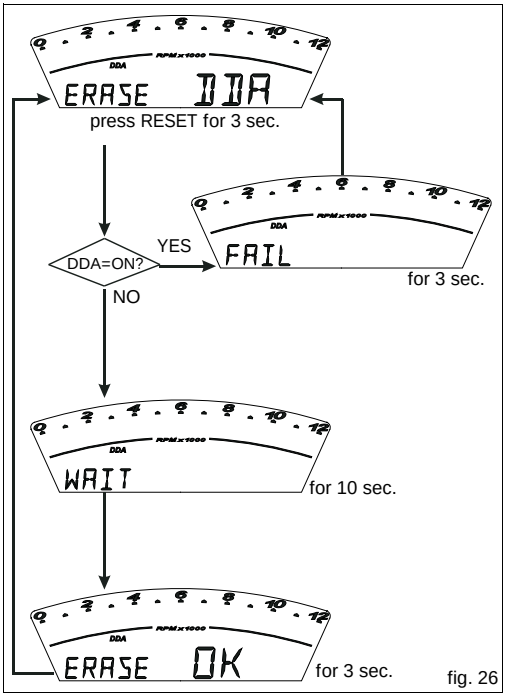

fig. 26

E

Function for activation/deactivation of DTC (Ducati Traction Control)

Warning
THIS FUNCTION IS ONLY AVAILABLE ON STREETFIGHTER S VERSION.
It is used to activate the Ducati Traction Control system: DTC.

DESCRIPTION OF THE SYSTEM

Warning
DTC is a rider aid that can be used both on the track and the road.

The system is designed to make riding easier and to enhance safety, but in no way relieves the rider of the obligation to drive responsibly and to maintain a high standard of riding in order to avoid accidents, whether caused by his own errors or those of other road users, through making emergency manoeuvres, in accordance with the prescriptions of the road traffic code.
The rider must always be aware that active safety systems have a preventive function. The active elements help the rider control the motorcycle, making it as easy and safe to ride as possible. The presence of an active safety system should not encourage the rider to ride at speeds beyond the reasonable limits, in accordance with the road conditions, the laws of physics, good riding standards and the requirements of the road traffic code.

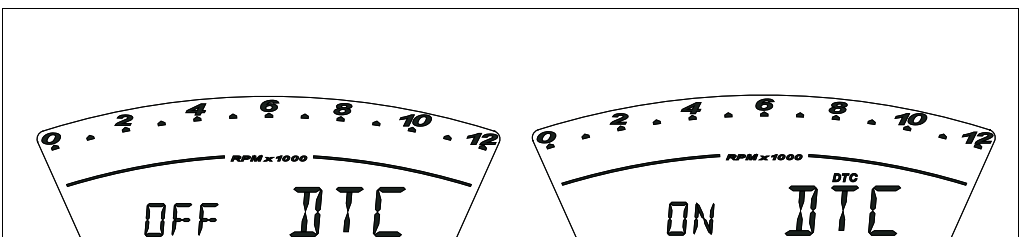

fig. 27

Activation of the system

To activate the system, the motorcycle must be stationary and safely parked.
To enable Traction Control, enter the menu and set “DTC” to “On” by pressing RESET switch (14, fig. 5) for 3 seconds; once the 3 seconds have elapsed, the message “DTC” will appear on the display to indicate activation of the Ducati Traction Control system. When activated, the message “DTC” is visible both on the normal display and also within the menu pages.

Note

The functions of the system
To operate the system, the motorcycle must be stationary and safely parked.
Each time DTC is activated, the Traction Control ECU will set the sensitivity level to 8; the level may then be adjusted using the function “Traction Control Sensitivity Level Setting (DTC SETUP)”.
To disable Traction Control, enter the menu and set “DTC” to “OFF” by pressing again RESET switch (14, fig. 5) for 3 seconds; once the 3 seconds have elapsed, the message “DTC” will disappear from the display, thereby indicating deactivation of the Ducati Traction Control system.
If the engine suddenly stops or is switched off (Key-Off) while Traction Control is activated, the function will NOT be disabled but will still be active (DTC On) at the next Key-ON. If, however, battery power is suddenly cut off (Batt-OFF), when battery power is restored and upon next Key-On, the Traction Control will no longer be activated (DTC OFF).

Routine maintenance

To ensure that system continues to function correctly it is necessary to observe the manufacturer’s routine maintenance schedule

E

DTC (Ducati Traction Control) setting function

Warning
THIS FUNCTION IS ONLY AVAILABLE ON STREETFIGHTER S VERSION.

This function serves to set the sensitivity level for the DTC (Ducati Traction Control).

To set the Traction Control sensitivity level, with the motorcycle stationary, enter the "Setup DTC" menu page. This page only appears in the menu once the Traction Control ECU has been activated (DTC ON).
The Traction Control sensitivity level setting will be indicated on the left-hand side of the display (L.1…….L.8); the intervention levels range from "1" to "8"; the higher the number, the greater the intervention of the Traction Control system (see following paragraph).
Within this menu page, press RESET switch (14, fig. 5) for 3 seconds to access the level setting function.

page 1: the display will show "LEVEL 1".
If you wish to set this level, press the RESET button (14, fig. 5) for 3 seconds; the instrument panel will automatically quit this page and return to the initial display, with the level setting indicated at the centre.
If instead you wish to set the next highest level, press switch (2, fig. 10) "▼".

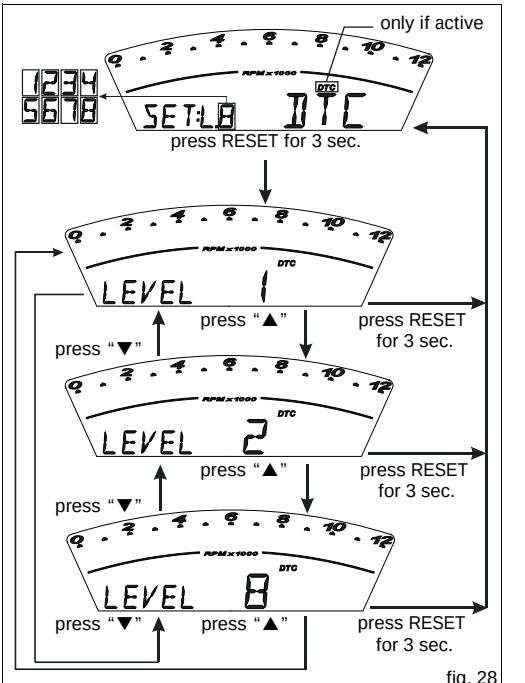

fig. 28

page 2: the display will show “LEVEL 2“.
If you wish to set this level, press the RESET button (14, fig. 5) for 3 seconds; the instrument panel will automatically quit this page and return to the initial display, with the level setting indicated on the right.
If instead you wish to set the next highest level, press switch (2, fig. 10) “▼”. If you wish to return to the previous level, press switch (1, fig. 10) “▲”.

page 3: the display will show “LEVEL 3“.
If you wish to set this level, press the RESET button (14, fig. 5) for 3 seconds; the instrument panel will automatically quit this page and return to the initial display, with the level setting indicated on the right.
If instead you wish to set the next highest level, press switch (2, fig. 10) “▼”. If you wish to return to the previous level, press switch (1, fig. 10) “▲”.

page 4: the display will show “LEVEL 4“.
If you wish to set this level, press the RESET button (14, fig. 5) for 3 seconds; the instrument panel will automatically quit this page and return to the initial display, with the level setting indicated on the right.
If instead you wish to set the next highest level, press switch (2, fig. 10) “▼”. If you wish to return to the previous level, press switch (1, fig. 10) “▲”.

page 5: the display will show “LEVEL 5“.
If you wish to set this level, press the RESET button (14, fig. 5) for 3 seconds; the instrument panel will automatically quit this page and return to the initial display, with the level setting indicated on the right.
If instead you wish to set the next highest level, press switch (2, fig. 10) “▼”. If you wish to return to the previous level, press switch (1, fig. 10) “▲”.

page 6: the display will show “LEVEL 6 “.
If you wish to set this level, press the RESET button (14, fig. 5) for 3 seconds; the instrument panel will automatically quit this page and return to the initial display, with the level setting indicated on the right.
If instead you wish to set the next highest level, press switch (2, fig. 10) “▼”. If you wish to return to the previous level, press switch (1, fig. 10) “▲”.

page 7: the display will show “LEVEL 7“.
If you wish to set this level, press the RESET button (14, fig. 5) for 3 seconds; the instrument panel will automatically quit this page and return to the initial display, with the level setting indicated on the right.
If instead you wish to set the next highest level, press switch (2, fig. 10) “▼”. If you wish to return to the previous level, press switch (1, fig. 10) “▲”.

page 8: the display will show “LEVEL 8“.
If you wish to set this level, press the RESET button (14, fig. 5) for 3 seconds; the instrument panel will automatically quit this page and return to the initial display, with the level setting indicated on the right.
If instead you wish to set the next highest level, press switch (2, fig. 10) “▼”. If you wish to return to the previous level, press switch (1, fig. 10) “▲”.

If DTC is activated, the level setting can also be displayed outside the page “SETUP DTC” at the end of the TOT, TRIP, TRIP Fuel (if active), Clock and T-AIR display functions.

The level setting will remain in memory even after Key-Off.

If, however, battery power is suddenly cut off (Batt-OFF), when battery power is restored and upon next Key-On, the Traction Control will no longer be activated (DTC OFF).

Tips on how to select the sensitivity level

Warning

The 8 DTC level settings have been calibrated using the same tyres as those originally supplied with your motorcycle (same make, model and size).
The use of tyres of different size to the original tyres may alter the operating characteristics of the system.
In the case of minor differences, such as for example, tyres of a different make and/or model than the OE ones, but with the same dimensions (rear = 190/55-17; front = 120/70-17), it may be sufficient to simply select the suitable level setting from those available to restore optimal system operation.
If tyres of a different size class are used or if the tyre dimensions differ significantly from the original tyres, it may be that the system operation is affected to the point where none of the 8 available level settings will give satisfactory results.
In this case is it is advisable to deactivate the traction control system.

If level 8 is selected, the DTC control unit will kick in at the slightest hint that the rear wheel is starting to spin.
Between level 8 and level 1 there are a further 6 intermediate levels. The level of DTC sensitivity decreases in equal steps from level 8 to level 1.
When level 1, 2 or 3 is selected the DTC control unit will allow the rear wheel to spin and also slide sideways on exiting a corner; we recommend that this setting is only used by very experienced riders on the track.
The choice of the correct level depends on 3 main variables:

1) The grip (type of tyre, amount of tyre wear, the road/ track surface, weather conditions, etc.)
2) The characteristics of the path/circuit (bends all taken at similar speeds or at very different speeds)
3) The riding style (whether the rider has a “smooth” or a “rough” style)

Relation of the DTC sensitivity level to grip conditions:
The choice of level setting depends greatly on the grip conditions of the track/circuit (see below, tips for use on the track and on the road).

Relation of the DTC sensitivity level to the path characteristics:
If all the corners on the track/circuit can be taken at a similar speed, it will be easier to find an intervention level that is satisfactory for every bend; on the other hand, if the track has, for example, one corner that is much slower than all the others, it will be necessary to find a compromise level (on the slow corner the DTC will tend to kick in more than on the faster corners).

Relation of the DTC sensitivity level to riding style:
The DTC will tend to kick in more with a “smooth” riding style, where the bike is leaned over further, rather than with a “rough” style, where the bike is straightened up as quickly as possible when exiting a corner.

Tips for use on the track

We recommend that level 8 is used for a couple of full laps (to allow the tyres to warm up) in order to get used to the system. Then try levels 7 and 6, etc., in succession until you identify the DTC sensitivity level that suits you best (always try each level for at least two laps to allow the tyres to warm up).
Once you have found a satisfactory setting for all the corners except one or two slow ones, where the system tends to kick in too much, you can try to modify your riding style slightly to a more “rough” approach to cornering i.e. straighten up more rapidly on exiting the corner, instead of immediately trying a different level setting.

Tips for use on the road

Activate the DTC, select level 8 and ride the motorcycle in your usual style; if the level of DTC sensitivity seems excessive, try reducing the setting to level 7, 6, etc., until you find the level that suits you best.
If changes in the grip conditions and/or circuit characteristics and/or your riding style, and the level setting is no longer suitable, switch to the next level up or down and proceed as described above to determine the best setting (e.g. if with level 7 the DTC intervention seems excessive, switch to level 6; alternatively, if on level 7 you cannot perceive any DTC intervention, switch to level 8).

E

Clock setting function

This function is used to set the clock time.
To set the clock, enter the menu page “TIME SEt“.
Holding RESET button (14, fig. 5) pressed for 3 seconds in this menu page gives access to the setup mode.
When you access this function, the word “AM“ flashes; if you press the button (1, fig. 10) “▲” the message “PM” flashes; if you press the button (1, fig. 10) “▲” the mode will go back to previous setting (if it is 00:00, when toggling from “AM” to “PM”, 12:00 will be displayed).
pressing button (2, fig. 10) “▼“ gives access to the hour setting mode; hours start to flash. Each time you press the button (1, fig. 10) “▲“, the digit will increase by 1 hour; If the button is held pressed (1, fig. 10) “▲” the digit will increase by 1 hour every second (when the button is held depressed, the hours do not flash).
Pressing button (2, fig. 10) “▼“ gives access to the minute setting mode; minutes start to flash. Each time you press the button (1, fig. 10) “▲“, the digit will increase by 1 minute; holding down the button (1, fig. 10) “▲“, the digit will increase by 1 minute each second. If the button is held depressed (1, fig. 10) “▲“ for over 5 seconds, minutes will increase by 1 minute every 100ms [while the button is held depressed (1, fig. 10) “▲“, seconds will not flash].
Pressing the button (1, fig. 10) “▲“, exits setup mode and the new time is displayed.

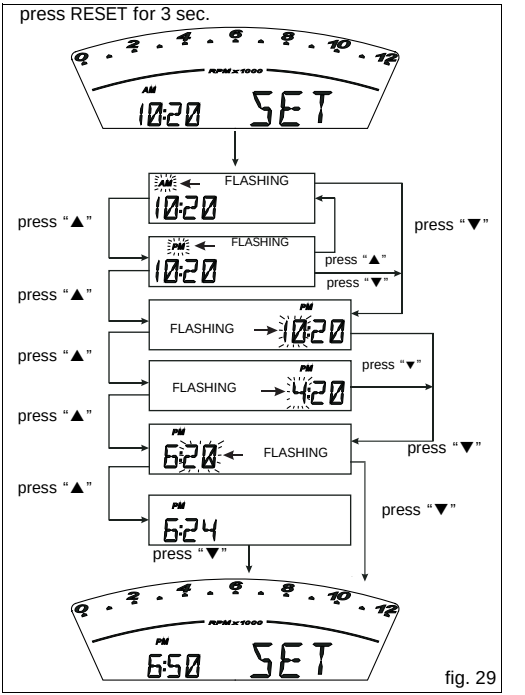

fig. 29

Instrument panel diagnostics

Important
The instrument panel runs system diagnostics after 60 seconds from the last Key-Off.

Any abnormal vehicle behaviour is displayed.
If more errors are present, they are displayed one by one every 3 seconds.
Possible errors are listed in the table below.

Warning
When an error is displayed, always contact a Ducati Dealer or authorised Service Center.

WARNING LIGHT	ERROR MESSAGE		ERROR
	TPS	1.1	Throttle position sensor error
	TPS	1.2	Throttle position sensor error
	PRES	2.1	Pressure sensor error
	PRES	2.2	Pressure sensor error
	T WAT	3.1	Engine water temperature sensor error
	T WAT	3.2	Engine water temperature sensor error

WARNING LIGHT	ERROR MESSAGE		ERROR
	T AIR	4.1	Air temperature sensor error
	T AIR	4.2	Air temperature sensor error
	BATT	5.1	Battery voltage error
	BATT	5.2	Battery voltage error
	LAMB	6.1	Lambda sensor error
	LAMB	6.2	Lambda sensor error 2
	FUEL	7.1	Low fuel error
	FUEL	7.2	Low fuel error
	DTC	8.0	Traction control ECU error
	COIL	10.1	Horizontal cylinder coil error
	COIL	10.2	Horizontal cylinder coil error
	COIL	11.1	Vertical cylinder coil error

WARNING LIGHT	ERROR MESSAGE		ERROR
	COIL	11.2	Vertical cylinder coil error
	INJE	12.1	Horizontal cylinder injector error
	INJE	12.2	Horizontal cylinder injector error
	INJE	13.1	Vertical cylinder injector error
	INJE	13.2	Vertical cylinder injector error
	PUMP	16.0	Fuel pump relay error
	FAN	18.1	Fan relay error
	FAN	18.2	Fan relay error
	STRT	19.1	Solenoid starter error
	STRT	19.2	Solenoid starter error
	STEP	21.1	Stepper motor error
	STEP	21.2	Stepper motor error

E

WARNING LIGHT	ERROR MESSAGE		ERROR
	STEP	21.3	Stepper motor error
	LAMB	22.1	Lambda heaters error
	LAMB	22.2	Lambda heaters error
	EXVL	23.1	Exhaust butterfly valve motor error
	EXVL	23.2	Exhaust butterfly valve motor error
	EXVL	23.3	Exhaust butterfly valve motor error
	EXVL	23.4	Exhaust butterfly valve motor error
	ECU	30.0	Engine Control Unit error
	PK UP	34.0	Pick-up sensor error
	SPEED	36.0	Speed sensor error
	IMMO	37.0	Immobilizer error
	IMMO	37.1	Immobilizer error

WARNING LIGHT	ERROR MESSAGE		ERROR
	IMMO	37.5	Immobilizer error
	CAN	38.0	CAN communication line error

Turn indicators automatic “RESET” function

After activating one of the two turn indicators, user can reset them using the RESET button (14, fig. 5).
If turn indicator is not “RESET”, it will automatically switch off after the vehicle has covered 1 Km (0.6 miles) since turn indicator was activated.

Headlight “gradual” SWITCH-ON

Upon the Key-On, the Low beam (LO) turns on gradually (it takes about 3 sec. to reach full lighting state),
while it turns off at once.

Headlight “smart” auto-off

This function allows you to reduce current consumption from the battery, by automatically managing headlight switching-off. The device is enabled in three instances:

- In case1, when the key is turned from OFF to ON and the engine is not started within 60 seconds, the headlight is turned off and will be turned back on next time you start the engine.
- In case 2, after the vehicle has been running with the headlights on and the engine is stopped using the RUN-STOP button on the RH switch.
  In this case, 60 seconds after stopping the engine, the headlight is turned off and will be turned back on next time you start the engine.
- In case 3, while starting up the engine, the headlight is turned off and back on as soon as the engine is started.

The immobilizer system

For improved antitheft protection, the motorcycle is equipped with an IMMOBILIZER, an electronic system that inhibits engine operation whenever the ignition switch is turned off.
Accommodated in the handgrip of each ignition key is an electronic device that modulates an output signal. This signal is generated by a special antenna incorporated in the switch when the ignition is turned on and changes every time. The modulated signal acts as a password and tells the CPU that an "authorised" ignition key is being used to start up the engine. When the CPU recognises the signal, it enables engine start-up.

Keys (fig. 30)

The Owner receives a set of keys comprising:
- 2 (BLACK) keys B

These keys contain the "immobilizer system code".

Note

Your Ducati dealer may ask you to produce your Code Card in order to carry out certain servicing operations.

The black keys (B) are regular ignition keys and are used to:
- start up the engine
- open the fuel tank filler plug
- open the seat lock.

Note

The two keys have a small plate (1) attached that reports their identification number.

Warning

Separate the keys and always use the same black key to start the engine.

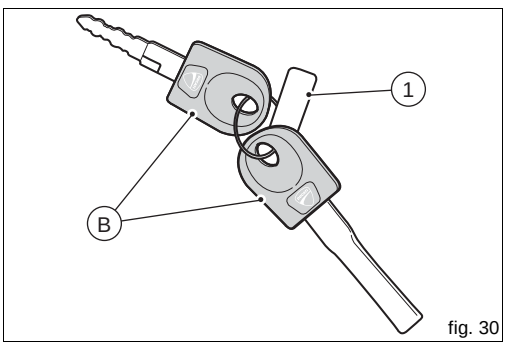

fig. 30

E

Code Card

The CODE CARD (fig. 31) supplied with the keys reports an electronic code (A, fig. 32) to start the engine in the event it fails to start after KEY-ON because the immobilizer system inhibited the ignition.

Warning

Keep the CODE CARD in a safe place. However, it is advisable to keep the electronic code printed on the CODE CARD handy when you ride your motorcycle, in case it is necessary to enable the engine through the procedure described below. This procedure lets you disable the “engine block” function - indicated by the amber yellow “Vehicle/Engine Diagnosis EOBD“ light (8, fig. 3) coming on - in the event of problems with the immobilizer system. But this operation can be carried out only if the electronic code indicated on the code card is known.

Warning

Your dealer will ask you to produce the Code Card in order to re-program or replace a key.



fig. 31

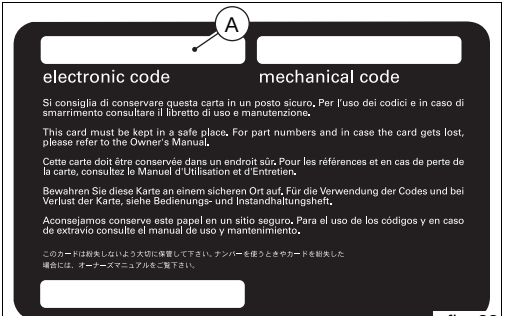

fig. 32

Immobilizer override procedure

In the event of an “Immobilizer BLOCK“, you will have to perform the “Immobilizer override procedure“ from the instrument panel; enter the corresponding function as described below:
Enter the menu and go to page “CODE“.

Note

This menu should only be active when at least one Immobilizer error is present.

This page menu shows a default “00000“ code; if you press down on the RESET button (14, fig. 5) for 3 seconds, you will access the procedure for entering the electronic code provided on the CODE CARD.

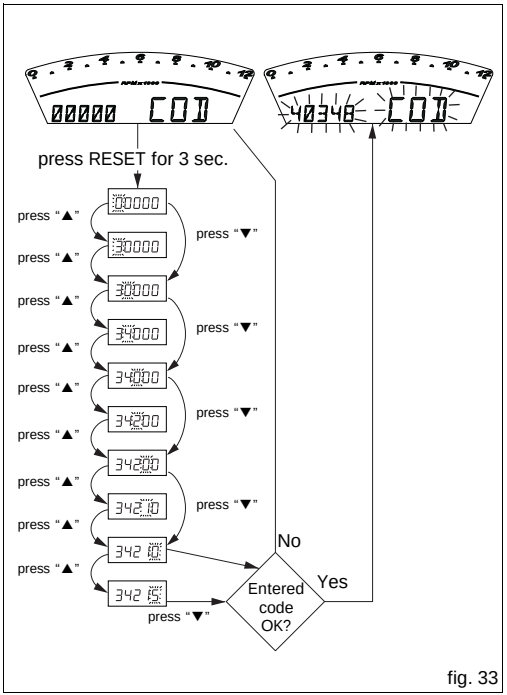

fig. 33

E

Entering the code:
when you access this function, the first digit on the left will flash.
Push-button (1, fig. 10)
Each time you press the button (1, fig. 10) "▲", the digit will increase by one unit per second;
pressing button (2, fig. 10) "▼" lets you set the second digit that starts to flash. Each time you press the button (1, fig. 10) "▲", the digit will increase by one unit per second;
pressing button (2, fig. 10) "▼" lets you set the third digit that starts to flash. Each time you press the button (1, fig. 10) "▲", the digit will increase by one unit per second;
pressing button (2, fig. 10) "▼" lets you set the fourth digit that starts to flash. Each time you press the button (1, fig. 10) "▲", the digit will increase by one unit per second;
pressing button (2, fig. 10) "▼" lets you set the fifth digit that starts to flash. Each time you press the button (1, fig. 10) "▲", the digit will increase by one unit per second;
pressing the button (2, fig. 10) "▼" confirms the code.

If the code has been entered correctly, the word "CODE" and the code you just entered will flash for 4 seconds;
The "Vehicle/engine diagnosis EOBD" light (8, fig. 3) will turn off; the instrument automatically exits the menu and the engine start-up inhibition is temporarily overridden.
If the error is still present, at the next Key-On the instrument panel error and the inhibited status will persist.
If the code is not entered correctly, the instrument panel reverts to the "CODE" menu and the default "00000" code.

Operation

When the ignition key is turned to OFF, the immobilizer inhibits engine operation. When the ignition key is turned back to ON to start the engine, the following happens:
1) if the code is recognised, the immobilizer enables engine ignition. Press the START button (2, fig. 41), to start the engine;
2) if the "Vehicle/Engine Diagnosis - EOBD" light (8, fig. 3) comes on and the page with the message "IMMO" is displayed when you press button (2, fig. 10) "▼", it means that the code was not recognised. When this is the case, turn the ignition key back to OFF and then to ON again. If the engine still does not start, try with another black key. If the other key does not work out either, contact the Ducati Service network.

Warning

Any important shock might damage the electronic components fitted into the key.
Use only one key during the procedure. Failure to do so might prevent the system from recognising the code of the key in use.

Duplicate keys

If you need additional keys, contact your DUCATI Service Centre with all the keys you have in your possession and your CODE CARD.
Ducati Service network will program new keys and reprogram your original keys.
You may be asked to identify yourself as the legitimate owner of the motorcycle. Be sure you have any documents you might need to this end ready.
The codes of any keys not submitted will be wiped off from the memory to make those keys unserviceable in case they have been lost.

Note

If you sell your motorcycle, do not forget to give all keys and the CODE CARD to the new owner.

E

Service menu - unit of measurement (UNIT SET)

This function allows you to select the units of measurement displayed on the instrument panel.
To enter the service menu push button (2, fig. 10) "▼" while turning the key from "Off" to "On".

Note

Within this MENU all other functions are excluded and motorcycle starting is disabled.

The first function displayed is "Immobilizer Reprogramming" (00000 PRO), press button (1, fig. 10) "▲" to display the other function of the "UNIT SET" service menu.
Now press the RESET button (14, fig. 5) for 3 seconds.
Each time you press switch (1, fig. 10) "▲" or (2, fig. 10) "▼", the instrument panel scrolls through the following sequence of options, which flash on the display:

UNITS OF MEASUREMENT			
Country	Speed	Air temperature	Counters
EU	Km/h	°C	Km
EN	mph	°C	miles
USA	mph	°F	miles
CND	Km/h	°C	Km
FRA	Km/h	°C	Km
JAP	Km/h	°C	Km
ECU Id.	The instrument configures the unit of measurement parameters in accordance with information relayed from the ECU		

If you press the RESET button (14, fig. 5) for 3 seconds, the option currently displayed will be saved to memory and the word "MEM" will appear.
The new parameter setting will applied at the next Key-On.

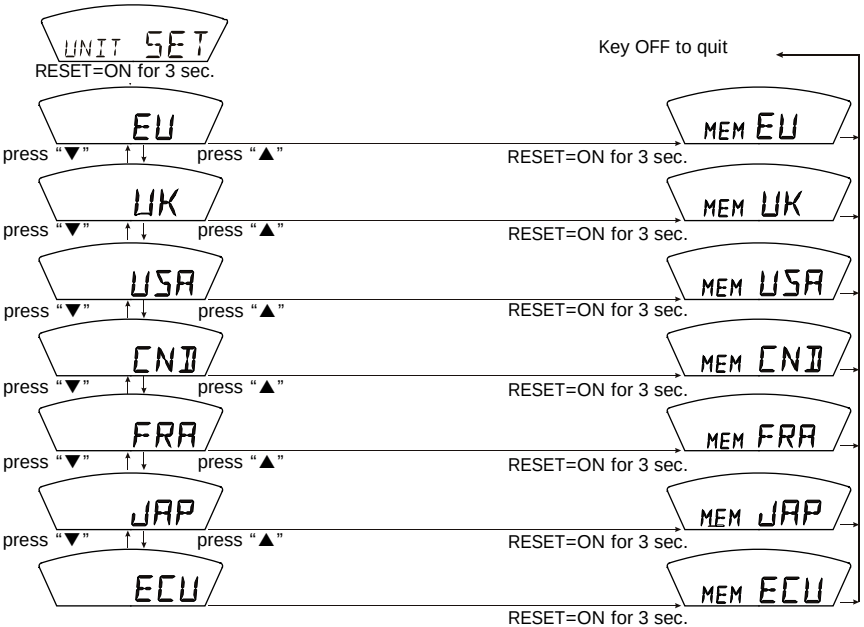
UNIT SET
RESET=ON for 3 sec.
Key OFF to quit
EU
press "▼"
press "▲"
MEM EU
RESET=ON for 3 sec.
UK
press "▼"
press "▲"
MEM UK
RESET=ON for 3 sec.
USA
press "▼"
press "▲"
MEM USA
RESET=ON for 3 sec.
CNI
press "▼"
press "▲"
MEM CNI
RESET=ON for 3 sec.
FRA
press "▼"
press "▲"
MEM FRA
RESET=ON for 3 sec.
JAP
press "▼"
press "▲"
MEM JAP
RESET=ON for 3 sec.
ECU
MEM ECU
RESET=ON for 3 sec.

fig. 34

Controls

Warning
This section details the position and function of all the controls you need to drive your motorcycle. Be sure to read this information carefully before you use the controls.

Position of motorcycle controls (fig. 35)

1) Instrument panel.
2) Key-operated ignition switch and steering lock.
3) Left-hand handlebar switch.
4) Clutch lever.
5) Rear brake pedal.
6) Right-hand handlebar switch.
7) Throttle twistgrip.
8) Front brake lever.
9) Gear change pedal.

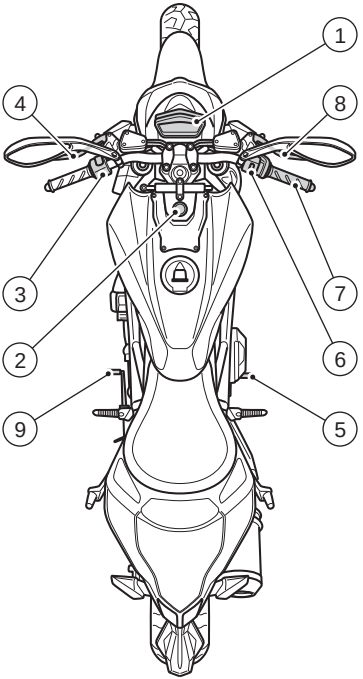

fig. 35

Key-operated ignition switch and steering lock (fig. 36)

It is located in front of the fuel tank and has four positions:

A) ○ : lights and engine enable;
B) ⊠ : lights and engine disable;
C) 🔒 : the steering is locked;
D) P⋐ : parking light and steering lock.

Note

To move the key to the last two positions, press it down before turning it. Switching to (B), (C) and (D), you will be able to take the key out.

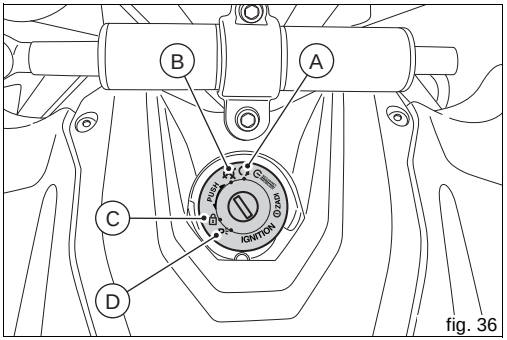

fig. 36

Lh switch (fig. 37 and fig. 38)

1) Dip switch, light dip switch, two positions:
position = low beam on (A);
position = high beam on (B).
Button = high-beam flasher (FLASH) and instrument panel control (C).

2) Switch = 3-position turn indicator:
centre position = OFF;
position = left turn;
position = right turn.
To cancel turn indicators, push in once switch returns to central position.

3) Button = warning horn.

4) Instrument panel control button "▲" position.
5) Instrument panel control button "▼" position.

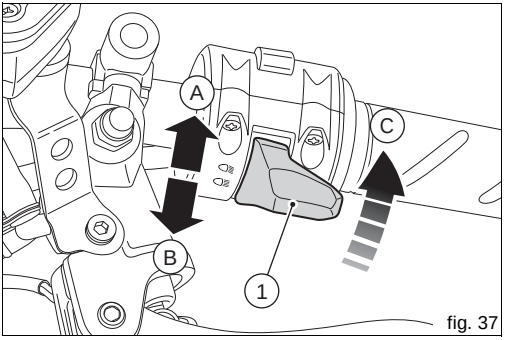

fig. 37

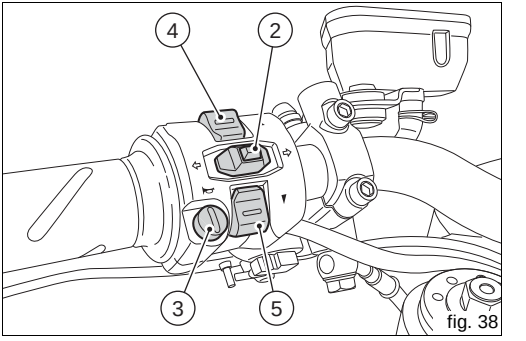

fig. 38

Clutch lever

Lever (1) disengages the clutch. It features a dial adjuster (2) for lever distance from the twistgrip on handlebar.
The dial adjuster (2) to adjust lever distance has 10 positions. Turn clockwise to increase lever distance from the twistgrip. Turn the adjuster counter clockwise to decrease lever distance.
When you pull in the lever (1), you will disengage the engine from the gearbox and therefore from the driving wheel. Using the clutch properly is essential to smooth riding, especially when moving off.

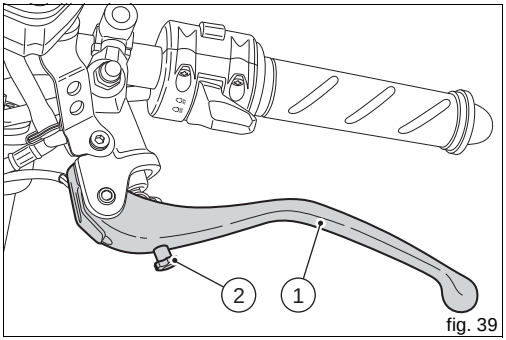

fig. 39

Warning

Set clutch lever when motorcycle is stopped.

Important

Using the clutch properly will avoid damage to transmission parts and spare the engine.

Note

It is possible to start the engine with the side stand down and the gearbox in neutral. When starting the bike with a gear engaged, pull the clutch lever (in this case the side stand must be up).

RH switch (fig. 40 and fig. 41)

1) ENGINE STOP switch, two positions:
position " ⟳ " (RUN) = run (A, fig. 41);
position " ⊠ " (OFF) = stop (B, fig. 41).

Warning

This switch is mainly intended for use in emergency cases when you need to stop the engine quickly. After stopping the engine, return the switch to the " ⟳ " position (A, fig. 41) to enable starting.

Important

Stopping the engine using switch (1) after riding with the lights on and leaving the ignition key in the ON position, may run the battery flat as the lights will remain on.

2) Button ⏻ = engine start

Throttle twistgrip (fig. 40)

The twistgrip (3, fig. 40) on the right handlebar opens the throttles. When released, it will spring back to the initial position (idling speed).

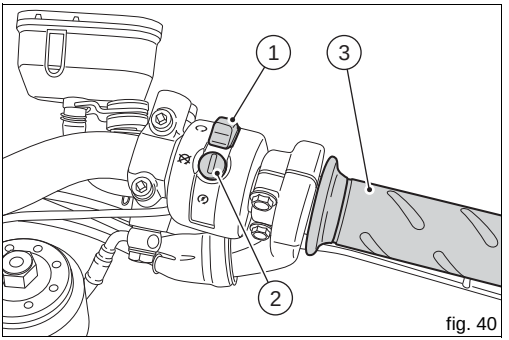

fig. 40

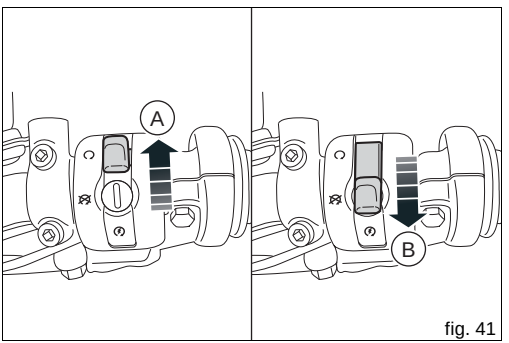

fig. 41

Front brake lever (fig. 42)

Pull in the lever (1) towards the twistgrip to operate the front brake. The system is hydraulically operated and you just need to pull the lever gently.
The control lever (1) features a dial adjuster (2) for lever distance from the twistgrip on handlebar.
The dial adjuster (2) to adjust lever distance has 10 positions. Turn clockwise to increase lever distance from the twistgrip. Turn the adjuster counter clockwise to decrease lever distance.

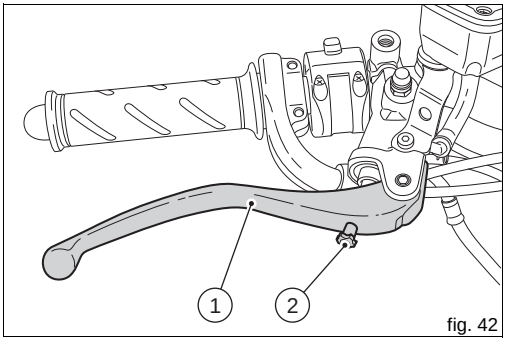

fig. 42

Rear brake pedal (fig. 43)

Push down on the pedal (1) to apply the rear brake.
The system is hydraulically operated.

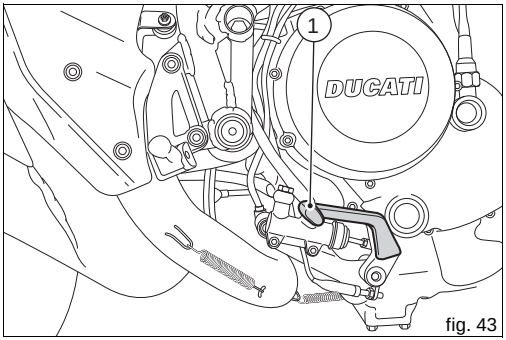

fig. 43

Gear change pedal (fig. 44)

When released, the gear change pedal automatically returns to rest position N in the centre; This is indicated by the instrument panel light N (3, fig. 3) coming on.
The pedal can be moved:
down = press down the pedal to engage the 1st gear and to shift down. The N light will go out.
upwards= lift the pedal to engage 2nd gear and then 3rd, 4th, 5th and 6th gears.
Each time you move the pedal you will engage the next gear.

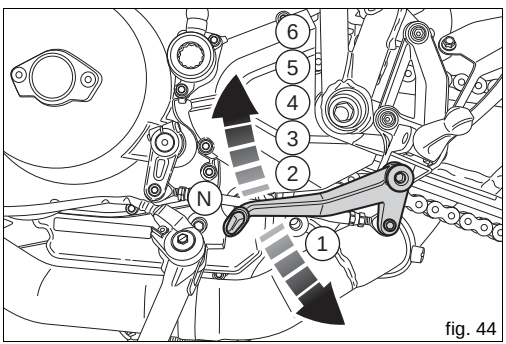

fig. 44

Setting the gear change and rear brake pedals (fig. 45 and fig. 46)

The gear change and rear brake pedals can be adjusted to suit the preferred riding position of each rider.
To adjust the position, proceed as follows:
hold the rod (1) and loosen lock nuts (2) and (3).

Note
Nut (2) has a left-hand thread.

Fit an open-end wrench to hexagonal element of linkage (1) and rotate until setting pedal in the desired position.
Tighten both check nuts onto linkage.

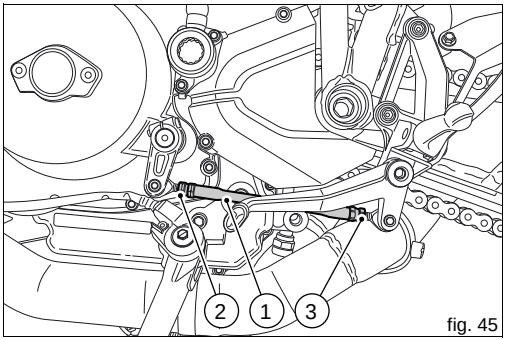

fig. 45

E

To set the rear brake pedal,
loosen counter nut (4).
Turn pedal travel adjusting screw (5) until pedal is in the desired position.
Tighten the check nut (4) to 2.3 Nm.
Work pedal by hand to make sure it has 1.5 - 2 mm free play before brake begins to bite.
If not so, set the length of cylinder linkage as follows.
Loosen the check nut (6) on cylinder linkage.
Tighten linkage into fork (7) to increase play, or unscrew linkage to reduce it.
Tighten the check nut (6) to 7.5 Nm and check play again.

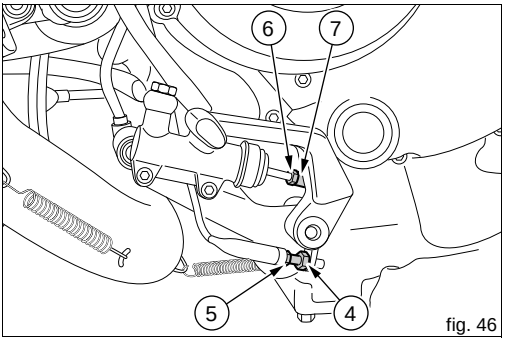

fig. 46

Main components and devices

Position on the vehicle (fig. 47)

1) Tank filler plug.
2) Seat lock.
3) Side stand.
4) Steering damper.
5) Rear-view mirrors.
6) Front fork adjusters.
7) Rear shock absorber adjusters.
8) Setup linkage.
9) Exhaust silencer (see “Warning” on page 80).
10) Catalytic converter.

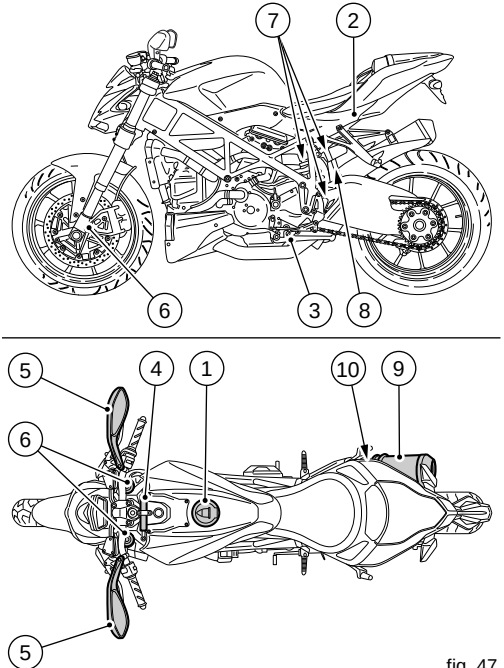

fig. 47

Fuel tank plug (fig. 48)

Opening

Lift the protection lid (1) and fit the ignition key into the lock.
Turn the key clockwise 1/4 turn to unlock.
Lift the plug.

Closing

Refit the plug with the key in it and push it down into its seat.
Turn the key anticlockwise to its initial position and take it out. Close the lock protection lid (1).

Note
The plug can only be closed with the key in.

Warning
Always make sure you have properly refitted (see page 82) and closed the plug after each refuelling.

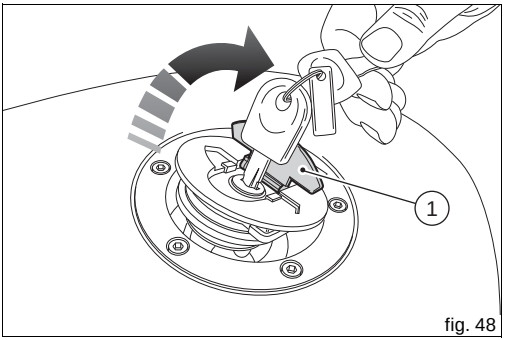

fig. 48

Seat latch (fig. 49 and fig. 50)

Opening

Insert the key into the lock (1, fig. 49) and rotate clockwise until you hear the seat latch click.
Push the seat forward to slide it off its front holders and raise it to completely remove it.

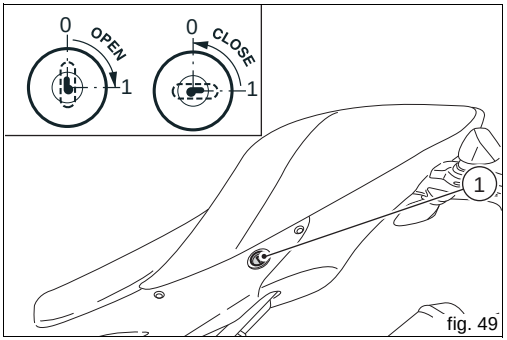

fig. 49

Closing

Engage hooks (3) at seat bottom in the relevant openings on tail guard, and push them under frame tube.
Push the passenger seat rear end until pin (4) clicks in place inside latch (5).
Pull the passenger seat moderately upwards to make sure it is correctly and firmly engaged.

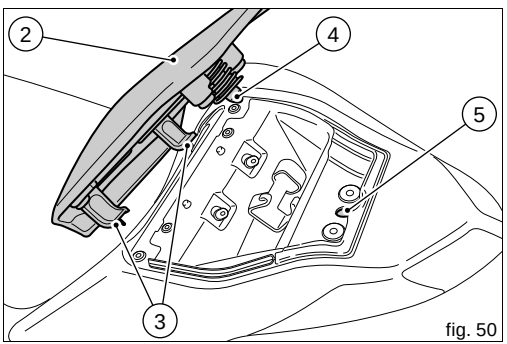

fig. 50

Side stand (fig. 51)

Important
Before lowering the side stand, make sure that the bearing surface is hard and flat.

Do not park on soft or pebbled ground or on asphalt melt by the sun heat and similar or the motorcycle may fall over.
When parking in downhill road tracts, always park the motorcycle with its rear wheel facing downhill.
To pull down the side stand, hold the motorcycle handlebars with both hands and push down on the thrust arm (1) with your foot until it is fully extended. Tilt the motorcycle until the side stand is resting on the ground.

Warning
Do not sit on the motorcycle when it is supported on the side stand.

To move the side stand to its rest position (horizontal position), lean the motorcycle to the right while lifting the thrust arm (1) with your foot.

Note
Check for proper operation of the stand mechanism (two springs, one into the other) and the safety sensor (2) at regular intervals.

Note
It is possible to start the engine with side stand down and the gearbox in neutral. When starting the bike with a gear engaged, pull the clutch lever (in this case the side stand must be up).

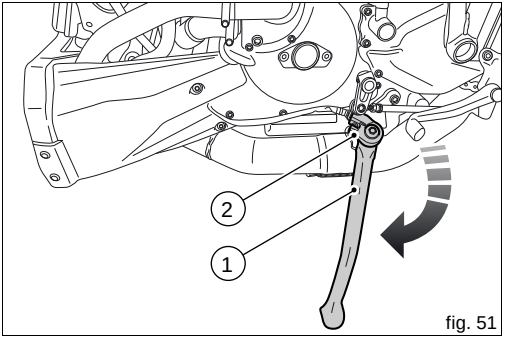

fig. 51

Steering damper (fig. 52)

It is located up front before the tank and is secured to frame and steering head.
It provides stable and accurate steering, improving the motorcycle's handling response under any conditions.

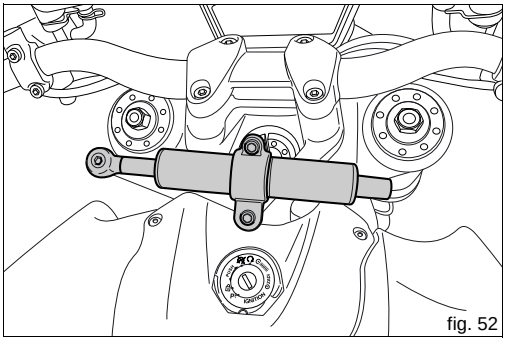

fig. 52

Front fork adjusters

The front fork used on this motorcycle has rebound, compression and spring preload adjustment.

This adjustment is done using the outer adjusters:

1) to adjust rebound damping (fig. 53 and fig. 54);
2) to adjust spring preload (fig. 53 and fig. 54);
3) to adjust compression damping (fig. 55 and fig. 56).

Place the motorcycle on the side stand and ensure it is stable.
Turn the adjuster (1) on fork leg top with a flat screwdriver (Streetfighter) or a suitable wrench (Streetfighter S) to adjust rebound damping.
As you turn the adjusting screws (1 and 3), you will hear them click. Each click identifies a setting. Turn the screw all the way in to set the hardest damping (position “0“). This will be your starting point. Now turn the adjuster counter clockwise and listen for the clicks that identify setting positions no. “1“, “2“ and so on.

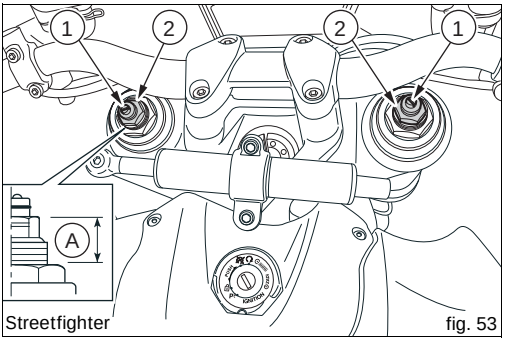

Streetfighter fig. 53

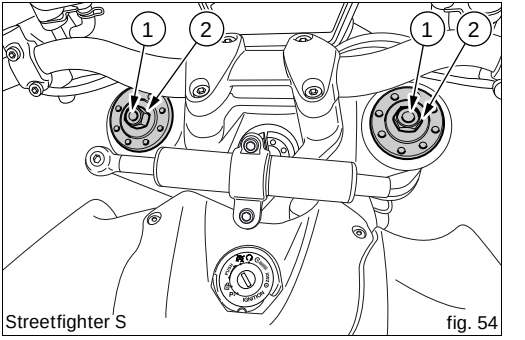

Streetfighter S fig. 54

STANDARD factory setting is as follows:
Compression:
3/4th of a turn (Streetfighter);
8 clicks (Streetfighter S).
Rebound:
12 clicks (Streetfighter);
10 clicks (Streetfighter S).
Spring preload (Streetfighter) (A, fig. 53): 18 mm;
corresponding to an actual preload of 9 mm.
Spring preload (Streetfighter S): from FULLY OPEN, tighten clockwise by 8 turns;
corresponding to an actual preload of 8 mm.

To change the preload of the spring inside each fork leg, turn the hex. adjuster (2, fig. 53 and fig. 54) with a 22-mm hexagon wrench.

Important
Adjust both fork legs to same settings.

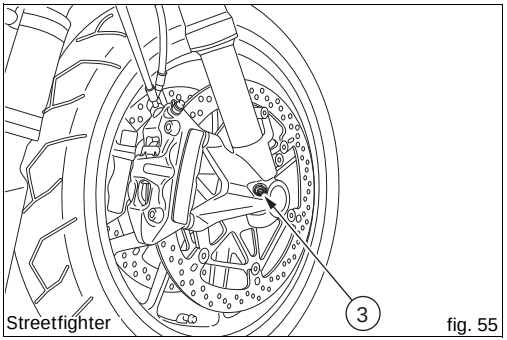

Streetfighter fig. 55

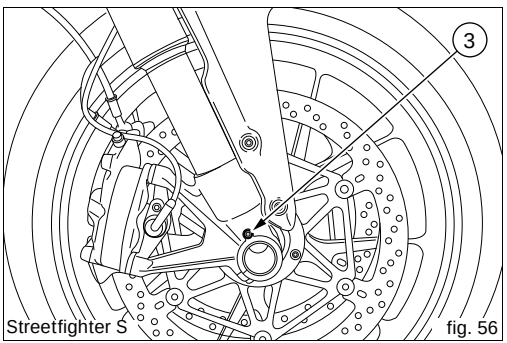

Streetfighter S fig. 56

Rear shock absorber adjusters

(fig. 57 and fig. 58)

The rear shock absorber has outer adjusters that enable you to adjust your motorcycle to the load.
The adjuster (1) on the left side of the connection holding the shock absorber to the swinging arm controls rebound damping.
The adjuster (2) on the shock absorber expansion reservoir controls compression damping.
Turning the adjusters (1 and 2) clockwise gives harder damping, turning anticlockwise gives softer damping.

(Streetfighter)
STANDARD setting:
from fully closed (clockwise) loosen:
shim (1) by 2 laps
shim (2) by 2 laps
Spring preload: 20 mm.

(Streetfighter S)
STANDARD setting:
from fully closed (clockwise) loosen:
adjuster (1) by 10 clicks;
adjuster (2) by 10 clicks;
Spring preload: 23 mm.
Two ring nuts (3) located on the top section of the shock absorber are used to adjust the outer spring preload. To change spring preload, slacken the upper locking ring nut. Then TIGHTEN or SLACKEN the lower ring nut to INCREASE or DECREASE spring preload.

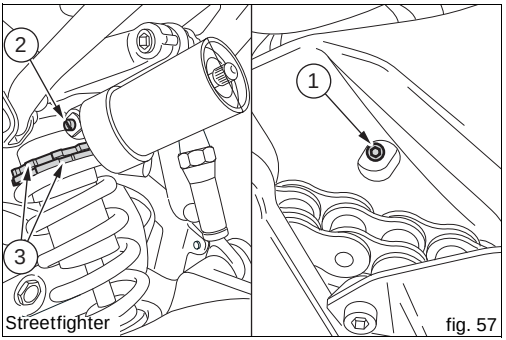

Streetfighter fig. 57

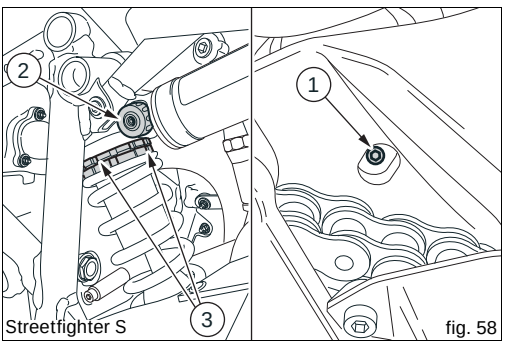

Streetfighter S fig. 58

Once preload has been set as required, tighten the upper ring nut.

Warning
Use a specific pin wrench to turn the preload adjusting nut. Be careful when turning the nut with the wrench, as the pin may slip out of the ring nut recess and you may hurt your hand hitting motorcycle parts.

Warning
The shock absorber is filled with gas under pressure and may cause severe damage if taken apart by unskilled persons.

When carrying a passenger and luggage, set the rear shock absorber spring to proper preload to improve motorcycle handling and keep safe clearance from the ground. You may find that rebound damping needs adjusting as well.

E

Changing motorcycle setup

(fig. 59, fig. 60 and fig. 61)

Motorcycle setup is the result of tests carried out under different riding conditions by our technical staff.
Modifying factory setting is a very delicate operation, which may lead to serious damages if carried out by unskilled people.
Before changing standard setting, measure the reference value (H, fig. 59).

The rider can modify setup according to his/her needs by changing working position of the shock absorber.
Loosen lock nuts (3) to change ball joints (1) centre distance.

Note

Please note that the lower nut (3) has a left-hand thread.

Apply an open-end wrench to the flats (4) on linkage (2) and set as required.
When finished, tighten the nuts (3) to 25 Nm.

Warning

Length of linkage (2), included between the two joint centre lines (1), should not exceed 285 mm.

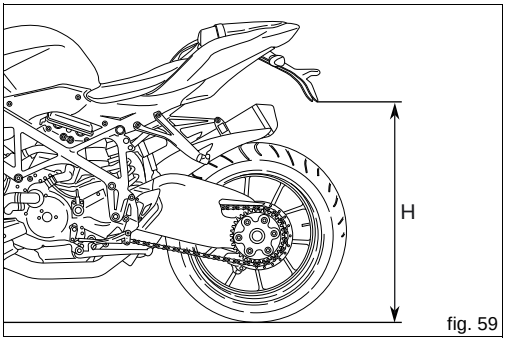

fig. 59

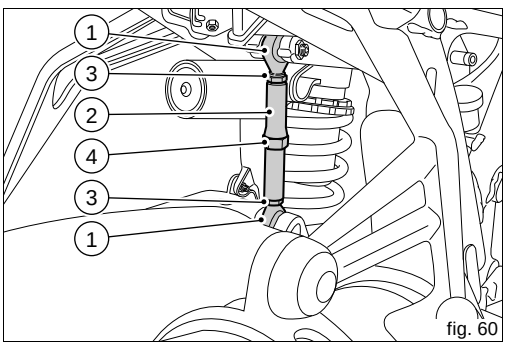

fig. 60

UNIBALL articulated head (A) maximum extension is 5 threadings, i.e. 7.5 mm (B).

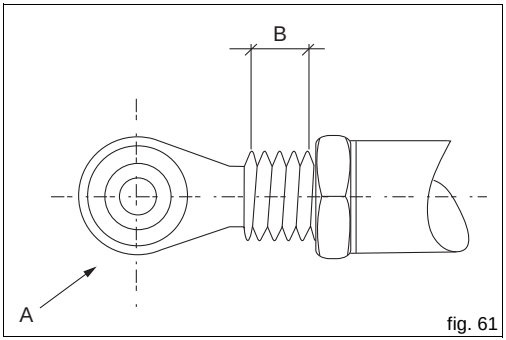

fig. 61

Directions for use

Running-in recommendations

Maximum rpm (fig. 62)

Rotation speed for running-in period and during standard use (rpm):

1) Up to 1000 km
2) From 1000 to 2500 km

Up to 1000 km

During the first 1000 km, keep an eye on the rev counter. It should never exceed
5,500÷6,000 rpm.
During the first hours of riding, it is advisable to run the engine at varying load and rpm, though still within recommended limit.
To this end, roads with plenty of bends and even slightly hilly areas are ideal for a most efficient running-in of engine, brakes and suspensions.

For the first 100 km use the brakes gently. Avoid sudden or prolonged braking. This will allow the friction material on the brake pads to bed in against the brake discs.
For all mechanical parts of the motorcycle to adapt to one another and above all not to adversely affect the life of basic engine parts, it is advisable to avoid harsh accelerations and not to run the engine at high rpm for too long, especially uphill.
Furthermore, the drive chain should be inspected frequently. Lubricate as required.

From 1000 to 2500 km

At this point, you can squeeze some more power out of your engine. However never exceed 7,000 rpm.

Important

During the whole running-in period, the maintenance and service rules recommended in the Warranty Card should be observed carefully. Failure to follow these instructions releases Ducati Motor Holding S.p.A. from any liability whatsoever for any engine damage or shorter engine life.

Strict observance of running-in recommendations will ensure longer engine life and reduce the likelihood of overhauls and tune-ups.

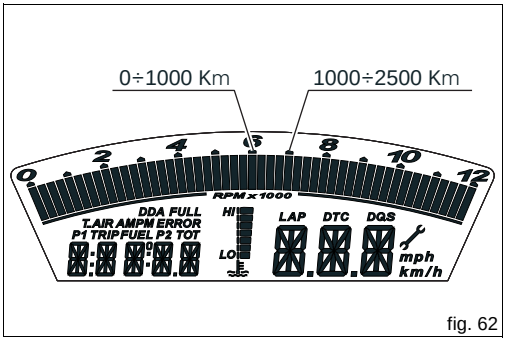

fig. 62

Pre-ride checks

Warning

Failure to carry out these checks before riding, may lead to motorcycle damage and injury to rider and passenger.

Before riding, perform a thorough check-up on your bike as follows:

FUEL LEVEL IN THE TANK
Check fuel level in the tank. Fill tank if needed (page 82).

ENGINE OIL LEVEL
Check oil level in the sump through the sight glass. Top up if needed (page 100).

BRAKE AND CLUTCH FLUID
Check fluid level in the relevant reservoirs (page 86).

COOLANT LEVEL
Check coolant level in the expansion reservoir. Top up if needed (page 85).

TYRE CONDITION
Check tyre pressure and condition (page 98).

CONTROLS
Work the brake, clutch, throttle and gear change controls (levers, pedals and twistgrips) and check for proper operation.

LIGHTS AND INDICATORS
Make sure lights, indicators and horn work properly. Replace any burnt-out bulbs (page 94).

KEY LOCKS
Ensure that fuel filler plug (page 64) and seat (page 65) are firmly secured.

SIDESTAND
Make sure side stand operates smoothly and is in the correct position (page 66).

Warning

In case of malfunction, do not ride the motorcycle and contact a Ducati Dealer or authorised Service Center.

Starting the engine

Warning
Before starting the engine, become familiar with the controls you will need to use when riding (see page 10).

Warning
Never start or run the engine indoors. Exhaust gases are poisonous and may lead to loss of consciousness or even death within a short time.

1) Move the ignition key to ON (1, fig. 63). Make sure both the green light N and the red light on the instrument panel come on.

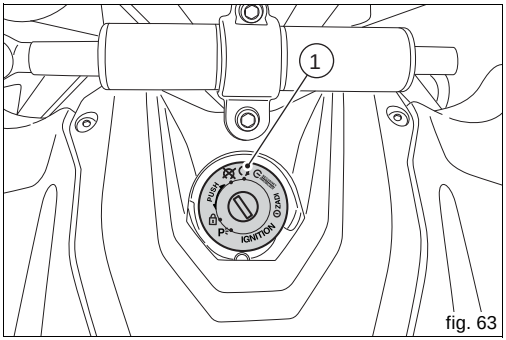

fig. 63

Important
The oil pressure light should go out a few seconds after the engine has started (page 11).

Warning
The side stand must be fully up (in a horizontal position) as its safety sensor prevents engine start when down.

Note

It is possible to start the engine with side stand down and the gearbox in neutral. When starting the bike with a gear engaged, pull the clutch lever (in this case the side stand must be up).

2) Check that the stop switch (2, fig. 64) is positioned to ∩ (RUN), then press the starter button (3, fig. 64).

Important

Do not rev up the engine when it is cold. Allow some time for oil to reach all points that need lubricating.

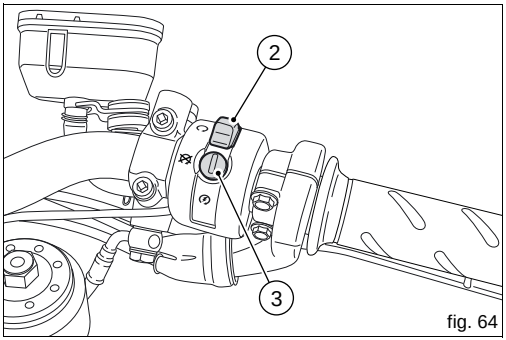

fig. 64

Moving off

1) Disengage the clutch squeezing the control lever.
2) Push down on gear change lever sharply with the tip of your foot to engage the first gear.
3) Speed up the engine by turning the throttle twistgrip while gradually releasing the clutch lever; the motorcycle will start moving off.
4) Let go of clutch lever and speed up.
5) To shift up, close the throttle to slow down engine, disengage the clutch, lift the gear change lever and let go of clutch lever.

To shift down, proceed as follows: release the twistgrip, pull the clutch control lever, shortly speed up to help gears synchronise, shift down (engage next lower gear) and release the clutch.
The controls should be used correctly and timely: when riding uphill do not hesitate to shift down as soon as the motorcycle tends to slow down, so you will avoid stressing the engine and the motorcycle abnormally.

Important

Avoid harsh accelerations, as this may lead to misfiring and transmission snatching. The clutch lever should not be pulled longer than necessary after gear is engaged, or friction parts may overheat and wear out.

Braking

Slow down in time, shift down to engine-brake first and then brake applying both brakes. Pull the clutch lever before stopping the motorcycle, to avoid sudden engine stop.

Warning

Use both brake lever and pedal for effective braking. Using only one of the brakes will give you less braking power. Never use brake controls harshly or violently or you may lock the wheels and lose control of the motorcycle. When riding in the rain or on slippery surfaces, braking will become less effective. Always use the brakes very gently and carefully when riding under these conditions. Any sudden manoeuvres may lead to loss of control. When tackling long, high-gradient downhill road tracts, shift down gears to use engine braking. Apply one brake at a time and use brakes sparingly. Keeping the brakes applied all the time would cause the friction material to overheat and reduce braking power dangerously. Underinflated or overinflated tyres reduce braking efficiency, handling accuracy and stability in a bend.

E

Stopping the motorcycle

If you let go of the throttle twistgrip, the motorcycle will slow down gradually and smoothly. Then, shift down releasing the clutch, and finally change from first to neutral. Apply brakes and you will bring the motorcycle to a complete stop. To switch the engine off, simply turn the key to OFF (1, fig. 65).

Important

Never leave the key in the ON position when engine is stopped, or this will damage the electric components.

Parking

Stop the motorcycle, then put it on the side stand (see page 66).

Turn the handlebar fully left and block it by pushing in the ignition key and turning it to the position (2, fig. 66).

If you park in a garage or other facilities, make sure that there is proper ventilation and that the motorcycle is not near a source of heat.

You may leave the parking lights on by turning the key to position (3, fig. 66).

Important

Do not leave the key turned to position (3, fig. 66) for long periods or the battery will run down. Never leave the ignition key in the switch when you are leaving your bike unattended.

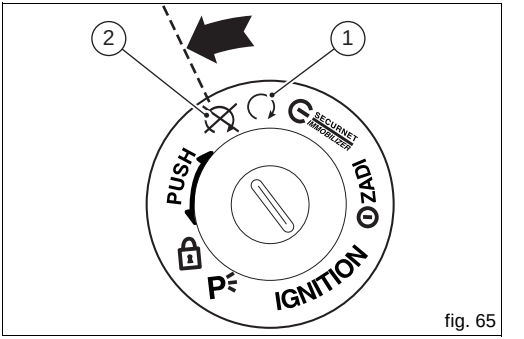

fig. 65

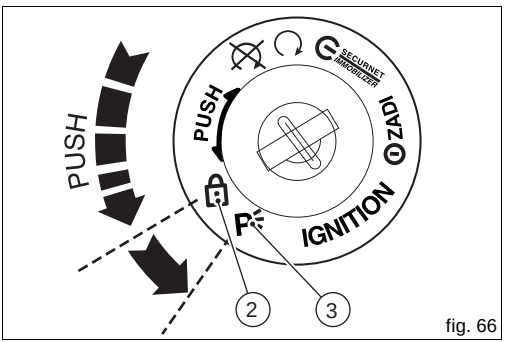

fig. 66

Warning
The exhaust system might be hot, even after engine is switched off; pay particular attention not to touch exhaust system with any body part and do not park the vehicle next to inflammable material (wood, leaves etc.).

Warning
Using padlocks or other locks designed to prevent motorcycle motion, such as brake disc locks, rear sprocket locks, and so on is dangerous and may impair motorcycle operation and affect the safety of rider and passenger.

E

Refuelling (fig. 67)

Never overfill the tank when refuelling. Fuel should never be touching the rim of filler recess.

Warning

Use low-lead fuel with 95 octane rating at origin minimum (see “Top-ups” table, page 109).
Be sure there is no fuel trapped in the filler recess.

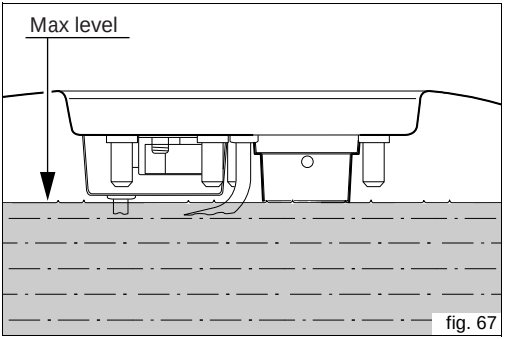

fig. 67

Tool kit and accessories (fig. 68)

The owner's manual is inside the compartment beneath the passenger seat.

The tool kit (1) is fixed with velcro inside the rear tail guard on the RH side of the vehicle, and it comprises:

- Box wrench for spark plugs;
- Tommy bar for plug wrench;
- Double-tip screwdriver;
- Allen wrench for fairings.

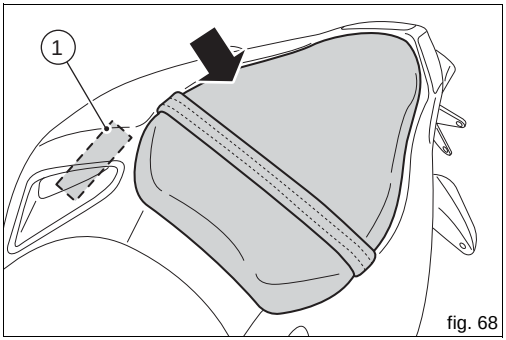

fig. 68

E

USB data logger (only for Streetfighter S)

A USB data logger (1) is supplied as a kit. To use the data logger, place it under the seat with the plug (2) installed and the main wiring harness connector (3) connected.
Please refer to the procedure given under "DDA data logger" in "LCD - Parameter setting/display".

Warning

After use, disconnect the DDA from the main wiring harness.

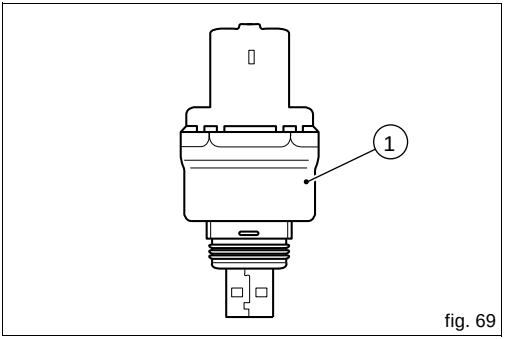

fig. 69

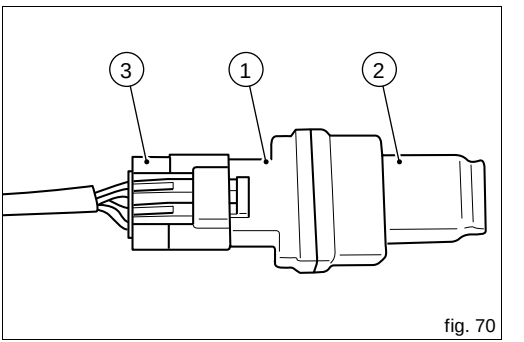

fig. 70

Refit the filler plug (3) and reassemble all removed parts. This type of mixture gives the best operating conditions (the coolant starts to freeze at -20 °C/-4 °F).

Cooling circuit capacity: 2.3 cu. dm (litres).

Warning
Place the motorcycle upright on a flat surface and make sure the engine is cold before proceeding.

Changing the air filter

Important
Have air filter serviced at a Ducati Dealer or authorised Service Centre.

Checking and topping up coolant level

(fig. 71)
Check coolant level in the expansion tank on the right side of the motorcycle; It should be between the two marks (1) and (2). Mark (2) indicates MAX level; Mark (1) indicates MIN level.
Top up if the level is below the MIN mark.

Unscrew the filler plug (3, fig. 71) and add a mixture consisting of water and antifreeze SHELL Advance Coolant or Glycoshell (35÷40% of the volume) up to MAX mark.

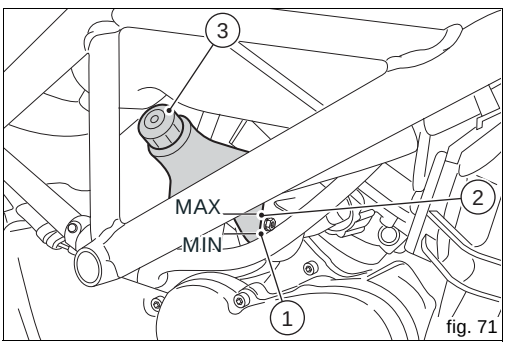

fig. 71

Checking brake and clutch fluid level

Level should never drop below the MIN marks on the tanks (fig. 72) (shown in the figure are the front and rear brake fluid reservoirs).
If level drops below the limit, air might get into the circuit and affect the operation of the system involved.
Brake and clutch fluid must be topped up and changed at the intervals specified in the scheduled maintenance chart reported in the Warranty Card; please contact a Ducati Dealer or authorised Service Centre.

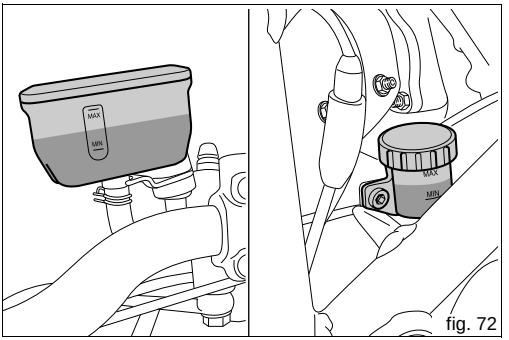

fig. 72

Important

It is recommended all brake and clutch lines be changed every four years.

Brake system

If you find exceeding play on brake lever or pedal and brake pads are still in good condition, contact your Ducati Dealer or authorised Service Center to have the system inspected and any air drained out of the circuit.

Warning

Brake and clutch fluid will damage paintwork and plastic parts if accidentally spilled. Hydraulic oil is corrosive; it may cause damage and lead to severe injuries. Never mix different quality oils.
Check seals for proper sealing.

Clutch system

If the control lever has exceeding play and the transmission snatches or jams as you try to engage a gear, it means that there might be air in the circuit. Contact your Ducati Dealer or authorised Service Center to have the system inspected and air drained out.

Warning

Clutch fluid level will increase as clutch plate friction material wears down. Do not exceed the specified level (3 mm above the minimum level).

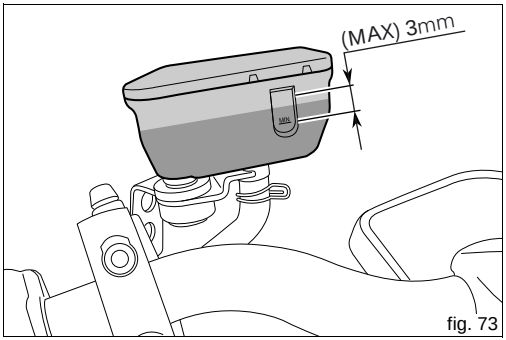

fig. 73

Checking brake pads for wear
(fig. 74 and fig. 75)

Front brake
To facilitate inspection without removing the pads from the callipers, brake pads have a wear mark. If the grooves in the friction material are still visible, the pad is still in good condition.

Rear brake
The friction material on each pad should be at least 1 mm thick.

Important
Have the brake pads replaced at a Ducati Dealer or authorised Service Center.

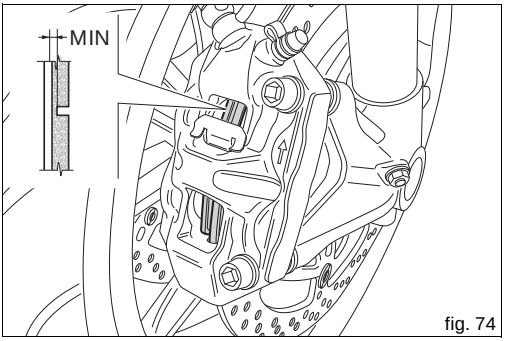

fig. 74

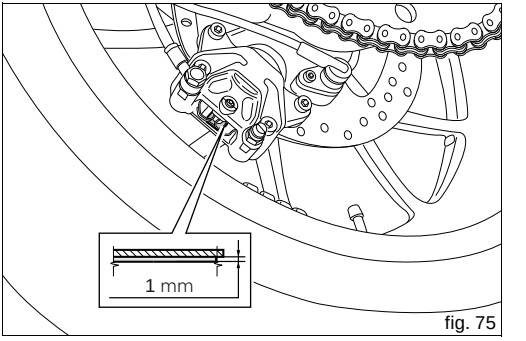

fig. 75

Lubricating cables and joints

Check the outer sheath of the throttle control cables for damage at regular intervals. The outer plastic cover should not be flattened or cracked. Work the controls to make sure the cables slide smoothly inside the sheaths: if you feel any friction or jamming, have the cable replaced by a Ducati Dealer or authorised Service Center.
To avoid this kind of problem with the throttle cable, unscrew the two retaining screws (1, fig. 76) to open the case and then grease cable ends and pulley with SHELL Advance Grease or Retinax LX2 grease.

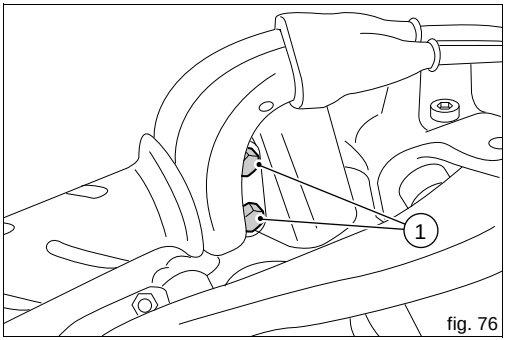

fig. 76

Warning

Close the case carefully after threading the cables onto the pulley.

Refit the cover and tighten the screws (1) to 10 Nm.

To ensure smooth operation of side stand joint, clean off any dirt and apply SHELL Alvania R3 at all points exposed to friction.

E

Adjusting throttle control free play

The throttle twistgrip must have
a free play of 1.5 - 2 mm measured
on the outer edge of the twistgrip. If necessary, adjust it using the adjusters (1 and 2, fig. 78) located on the steering tube on the right-hand side of the vehicle.
Adjuster (1) is for throttle opening, adjuster (2) for closing. Slip the rubber gaiters (3) off the adjusters and loosen the check nuts (4). Adjust both adjusters proportionally: turn clockwise to increase play, counter clockwise to decrease it. When finished, tighten the check nuts (4) and refit the rubber gaiters to the adjusters.

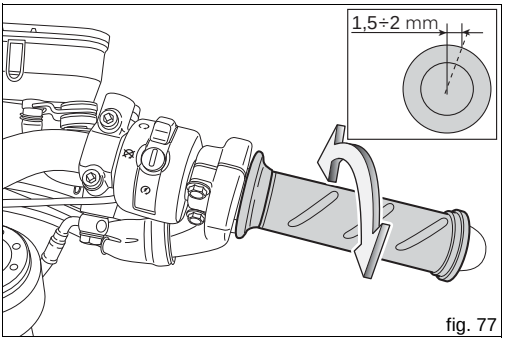

fig. 77

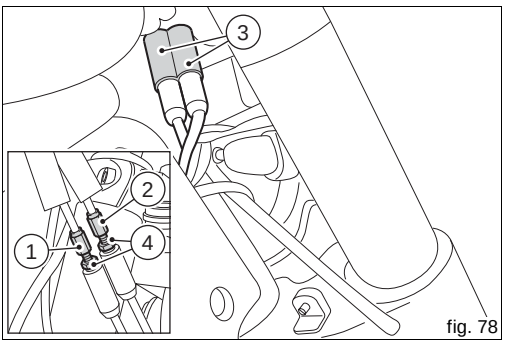

fig. 78

Charging the battery (fig. 79 and fig. 80)

Before charging the battery, it is best to remove it from the motorcycle. Remove the passenger seat (page 65), loosen the screws (1) and remove the underseat compartment (2). Always disconnect the black negative terminal (-) first, then the red positive terminal (**+**). Remove the battery by pulling it up.

Warning

Batteries develop explosive gases: keep it away from heat sources.

Charge the battery in a ventilated room.
Connect the battery charger leads to the battery terminals: red to the positive terminal (**+**), black to the negative terminal (-).

Important

Make sure the charger is off when you connect the battery to it, or you might get sparks at the battery terminals that could ignite the gases inside the cells.
Always connect the red positive (+) terminal first.

Reinstall the battery on the vehicle, apply some grease on the fastening screws to improve conductive capacity and connect the terminals. Set underseat compartment (2) on rear subframe and tighten screws (1). Refit the passenger seat (page 65).

Warning

Keep the battery out of the reach of children.

Charge the battery at 0.9 A for 5÷10 hours.

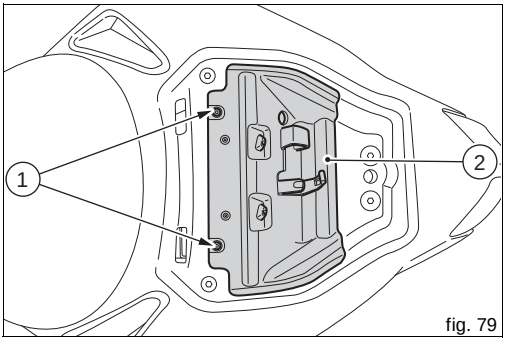

fig. 79

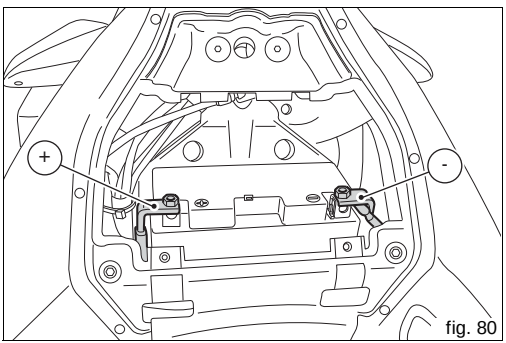

fig. 80

Checking drive chain tension
(fig. 81)

Important
Have chain tension adjusted by a Ducati Dealer or authorised Service Center.

Chain tension (on side stand): place ruler at mid-way of chain lower section, push chain downwards and release, tension up until distance between the aluminium section of the swingarm and chain pin centre is 32-34 mm.

Warning
Correct tightening of swinging arm screws (1) is critical to rider and passenger safety.

Important
Improper chain tension will lead to early wear of transmission parts.

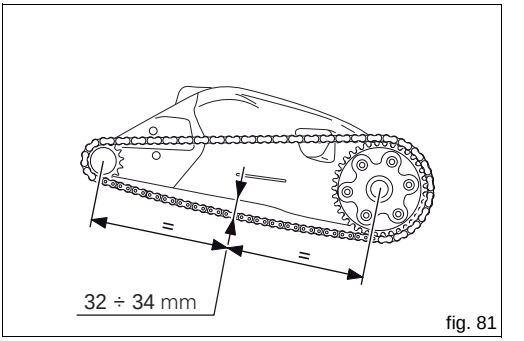

fig. 81

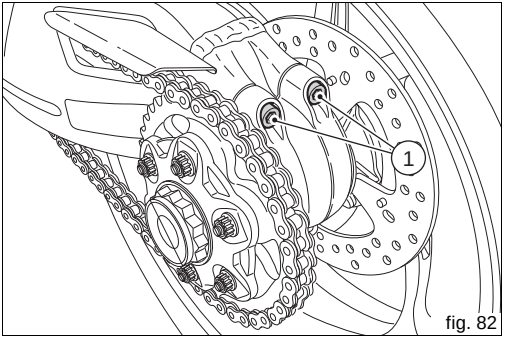

fig. 82

Chain lubrication

The chain fitted on your motorcycle has O-rings that keep dirt out of and lubricant inside the sliding parts.
The seals might be irreparably damaged if the chain is cleaned using any solvent other than those specific for O-ring chains or washed using steam or water cleaners.
After cleaning, blow the chain dry or dry it using absorbent material and apply SHELL Advance Chain or Advance Teflon Chain on each link.

Important

Using non-specific lubricants may lead to severe damage to chain, front and rear sprocket.

Replacing the high and low beam bulbs

Before replacing a burnt-out bulb, make sure that the new bulb complies with the voltage and wattage specified in the "Wiring diagram", page 115. Always test the new bulb before refitting any parts you have removed.
Shown in fig. 83 are the locations of the low beam bulb (LO) (1), high beam bulb (HI) and parking light bulb (2).

Headlight

Important
Have the high and low beam bulbs replaced by a Ducati Dealer or an authorised Service Centre.

Warning
The headlight might fog up if the vehicle is used when raining or after washing.
Switch the headlight on for a short time to dry up any condensate.

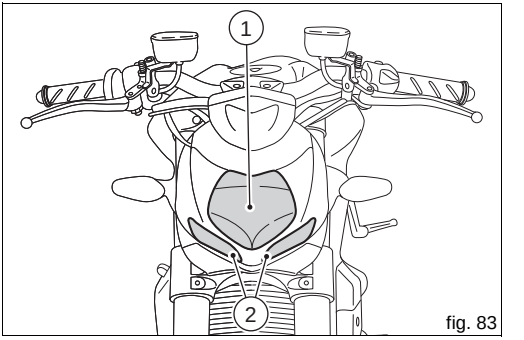

fig. 83

Rear turn signals (fig. 84)

Remove the screw (1) and detach the glasses (2) from the indicator body holder.
The bulb is of the banjo-type: press and rotate anticlockwise to remove; Fit the spare bulb by pressing and turning clockwise until it clicks. Refit the glasses (2) sliding the small tab into the suitable slot in the indicator body

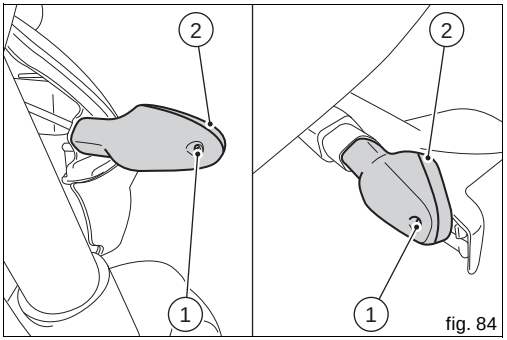

fig. 84

Number plate light (fig. 85)

Open the number plate light shield (3) to gain access to the number plate lamp, then remove the bulb and replace it.

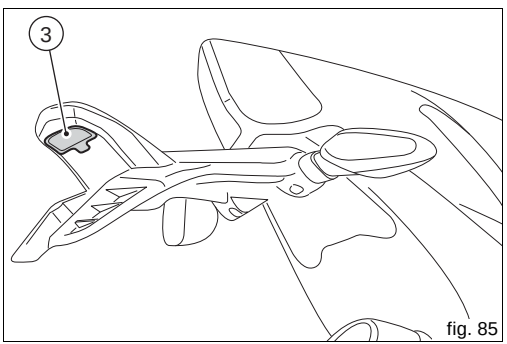

fig. 85

Beam setting (fig. 86)

When checking beam setting, put the motorcycle upright. Tyres should be inflated at the correct pressure and one person should be sitting astride the motorcycle, keeping it at right angles to its longitudinal axis. Place the motorcycle opposite a wall or a screen, 10 meters apart from it, then draw a horizontal line dictated by headlamp centre and a vertical one in line with the longitudinal axis of motorcycle. If possible, perform this check in dim light.
Switch on the low beam.
The height of the light spot (measured at the upper limit between dark and lighted-up area) should not exceed 9/10th of the height from ground of headlamp centre.

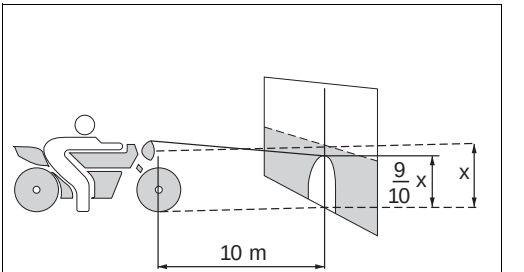

fig. 86

Note

The procedure described here is in compliance with the Italian Standard establishing the maximum height of the light beam.
Owners in other countries will adapt said procedure to the provisions in force in their countries.

The side position of the left beam can be corrected using the screw (1, fig. 87) on the rear side of the headlamp. Turn the screw clockwise to move the beam to the right, counter clockwise to move it to the left.
The height of the beam can be corrected using the screw (2, fig. 88) on the rear side of the headlamp. Turn the screw clockwise to lower the beam, anticlockwise to raise it.

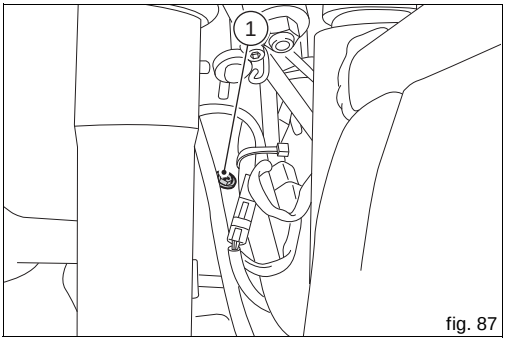

fig. 87

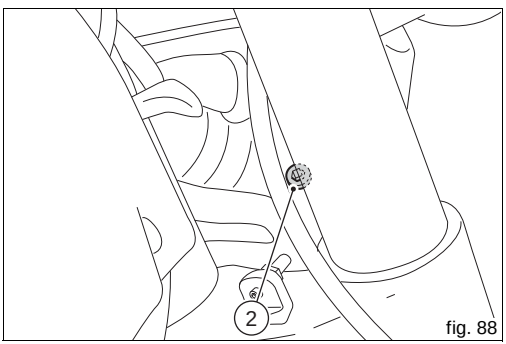

fig. 88

Tubeless tyres

Front tyre pressure:
2.5 bars.
Rear tyre pressure:
2.5 bars.
As tyre pressure is affected by temperature and altitude variations, you are advised to check and adjust it whenever you are riding in areas where ample variations in temperature or altitude occur.

Important

Check and set tyre pressure when tyres are cold.
To avoid front wheel rim distortion, when riding on bumpy roads, increase tyre pressure by 0.2 - 0.3 bar.

Tyre repair or change (Tubeless tyres)

In the event of a tiny puncture, tubeless tyres will take a long time to deflate, as they tend to keep air inside. If you find low pressure on one tyre, check the tyre for punctures.

Warning

A tyre must be replaced when punctured.
Replace tyres with recommended standard tyres only.
Be sure to tighten the valve caps securely to avoid leaks when riding. Never use tube type tyres. Failure to heed this warning may lead to sudden tyre bursting and to serious danger to rider and passenger.

After replacing a tyre, the wheel must be balanced.

Important

Do not remove or shift the wheel balancing weights.

Important

Have the tyres replaced at a Ducati Dealer or authorised Service Center. Correct removal and installation of the wheels is essential.

Minimum tread depth

Measure tread depth (S, fig. 89) at the point where tread is most worn down.
It should not be less than 2 mm, and in any case not less than the legal limit.

Important

Visually inspect the tyres at regular intervals for detecting cracks and cuts, especially on the side walls, bulges or large spots that are indicative of internal damage. Replace them if badly damaged.
Remove any stones or other foreign bodies caught in the tread.

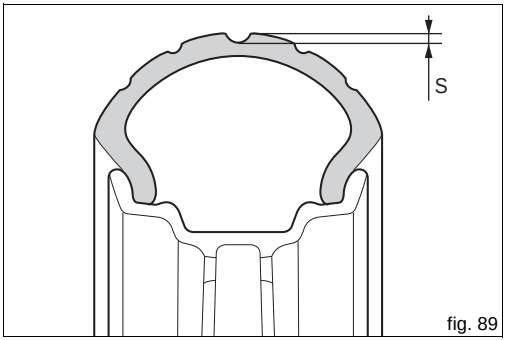

fig. 89

Checking engine oil level (fig. 90)

Check the engine oil level through the sight glass (1) on the clutch cover. Oil level must be checked with the motorcycle perfectly upright and the engine cold. Oil level should be between the marks on the sight glass. If level is low, top up with SHELL Advance Ultra 4 engine oil. Remove the filler plug (2) and top up to correct level. Refit the plug.

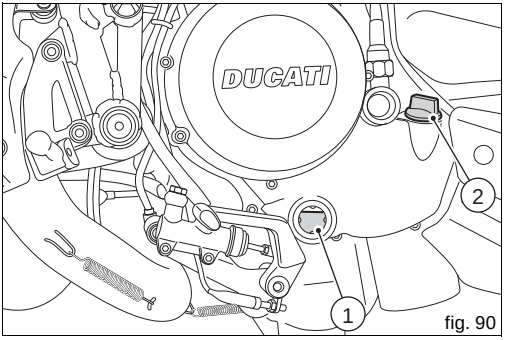

fig. 90

Important

Engine oil and oil filters must be changed by a Ducati Dealer or authorised Service Center at the intervals specified in the scheduled maintenance chart reported in the Warranty Card.

Viscosity

SAE 15W-50

The other viscosity degrees indicated in the table can be used if the local average temperature is within the limits specified for that oil viscosity.

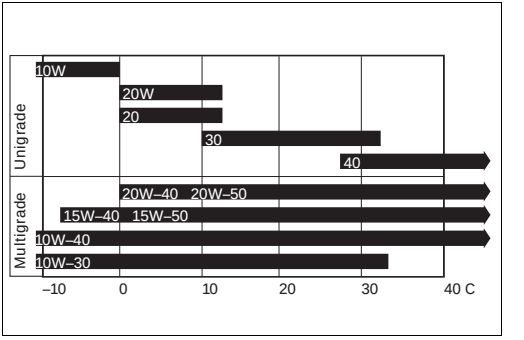

Cleaning and replacing the spark plugs

(fig. 91)

Spark plugs are essential to smooth engine running and should be checked at regular intervals.
This operation provides an indication of engine condition.
Have the spark plugs checked and replaced (as required) by a Dealer or authorised Service Center, who will check the colour of the ceramic insulator of the centre electrode; a uniform light brown colour indicates good engine condition.

Note

Inspect the centre electrode for wear and check spark plug gap, which should be:
0.8-0.1 mm.

Important

If gap is too wide or too close, engine performance will be affected. This could also cause difficult starting or irregular idling.

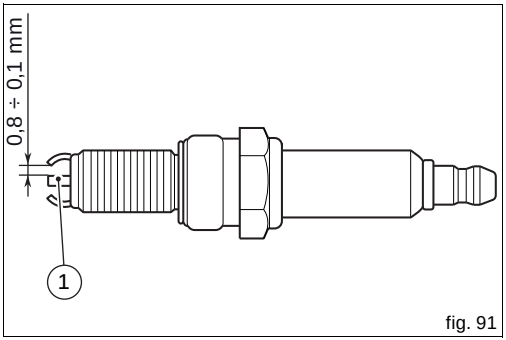

fig. 91

Cleaning the motorcycle

To preserve the finish of metal parts and paintwork, wash and clean your motorcycle at regular intervals, anyway according to the road conditions you ride in. Use specific products only. Prefer biodegradable products. Avoid aggressive detergents or solvents.
Use only water and neutral soap to clean the Plexiglas and the seat.

Important

Do not wash your motorcycle right after use. When the motorcycle is still hot, water drops will evaporate faster and spot hot surfaces. Never clean the motorcycle using hot or high-pressure water jets. Cleaning the motorcycle with a high pressure water jet may lead to seizure or serious faults in the front fork, wheel hub assembly, electrical system, headlight (fogging),
fork seals, air vents and exhaust silencers leading to the vehicle no longer meeting the safety requirements.

Clean off stubborn dirt or exceeding grease from engine parts using a degreasing agent. Be sure to avoid contact with drive parts (chain, sprockets, etc.) Rinse with warm water and dry all surfaces with chamois leather.

Warning

Braking performance may be impaired immediately after washing the motorcycle. Never grease or lubricate the brake discs. Loss of braking and further accidents may occur. Clean the discs with an oil-free solvent.

Warning

The headlight might fog up due to washing, rain or moisture.
Switch headlight on for a short time to dry up any condensate.

Storing the bike away

If the motorcycle is to be left unridden over long periods, it is advisable to carry out the following operations before storing it away:
clean the motorcycle;
empty the fuel tank;
pour a few drops of engine oil into the cylinders through the spark plug seats, then crank the engine by hand a few times so a protective film of oil will spread on cylinder inner walls;
place the motorcycle on the service stand;
disconnect and remove the battery.
Battery should be checked and charged (or replaced, as required) whenever the motorcycle has been left unridden for over a month.
Protect the motorcycle with a suitable canvas. This will protect paintwork and let condensate breathe out.
The canvas is available from Ducati Performance.

Important notes

Some countries, such as France, Germany, Great Britain, Switzerland, etc. have compulsory emission and noise standards that include mandatory inspections at regular intervals.
It is the Owner's responsibility to have any parts not in compliance with the standards in force in his/her country replaced with genuine Ducati spare parts and parts complying with local law.

Maintenance

Scheduled maintenance chart: operations to be performed by the dealer

List of operations and type of intervention [set mileage (km/mi) or time interval *]	Km. x1000	1	12	24	36	48	60
	mi. x1000	0.6	7.5	15	22.5	30	37.5
	Months	6	12	24	36	48	60
Change engine oil		●	●	●	●	●	●
Change engine oil filter		●	●	●	●	●	●
Clean engine oil filter at intake					●		
Check engine oil pressure				●		●	
Check/adjust the valve clearances (1)			●	●	●	●	●
Check the tension of the timing belts (1)			●		●		●
Change timing belts				●		●	
Check and clean spark plugs. Change, if necessary				●		●	
Check and clean air filter (1)			●		●		●

List of operations and type of intervention [set mileage (km/mi) or time interval *]	Km. x1000	1	12	24	36	48	60
	mi. x1000	0.6	7.5	15	22.5	30	37.5
	Months	6	12	24	36	48	60
Changing air filter				●		●	
Check throttle body synchronisation and idling (1)			●	●	●	●	●
Check brake and clutch fluid level		●	●	●	●	●	●
Change brake and clutch fluid					●		
Check and adjust brake and clutch controls			●	●	●	●	●
Check / lubricate throttle / cold start controls			●	●	●	●	●
Check tyre pressure and wear		●	●	●	●	●	●
Check brake pads. Change, if necessary		●	●	●	●	●	●
Check steering bearings				●		●	
Check chain tension, alignment and lubrication		●	●	●	●	●	●
Check clutch plates pack. Change, if necessary (1)			●	●	●	●	●
Check the coolant level			●	●	●	●	●
Change the coolant					●		
Check electric fan operation and cooling circuit sealing			●	●	●	●	●
Check rear wheel flexible coupling				●		●	
Check wheel hub bearings				●		●	
Check light and warning devices			●	●	●	●	●
Check tightening of nuts securing engine-to-frame screws			●	●	●	●	●
Check the sidestand			●	●	●	●	●

List of operations and type of intervention [set mileage (km/mi) or time interval *]	Km. x1000	1	12	24	36	48	60
	mi. x1000	0.6	7.5	15	22.5	30	37.5
	Months	6	12	24	36	48	60
Check front wheel nut tightening			●	●	●	●	●
Check rear wheel nut tightening			●	●	●	●	●
Check external fuel lines			●	●	●	●	●
Change front fork fluid					●		
Check front fork and rear shock absorber for leakage			●	●	●	●	●
Check front sprocket fasteners			●	●	●	●	●
Lubricate and grease			●	●	●	●	●
Check battery and recharge			●	●	●	●	●
Road test of the motorcycle		●	●	●	●	●	●
Cleaning the motorcycle			●	●	●	●	●

* Service on the set interval, whichever comes first (mileage or months)

(1) Operation to be performed only if set mileage (km/mi) is reached

Scheduled maintenance chart: operations to be performed by the customer

List of operations and type of intervention [set mileage (km/mi) or time interval *]	Km. x1000	1
	mi. x1000	0.6
	Months	6
Check engine oil level		●
Check brake and clutch fluid level		●
Check tyre pressure and wear		●
Check chain tension and lubrication		●
Check brake pads. If necessary, have replacement performed by a dealer		●

* Service on the set interval, whichever comes first (mileage or months)

Technical data

Overall dimensions (mm) (fig. 92)

Weights

Weight in running order without fuel:
188 Kg.

Weight in running order without fluids and battery
169 Kg (Streetfighter);
167 Kg (Streetfighter S);
Carrying full load:
390 kg.

Warning
Failure to observe weight limits could result in poor handling and impair the performance of your motorcycle, and you may lose control of the motorcycle.

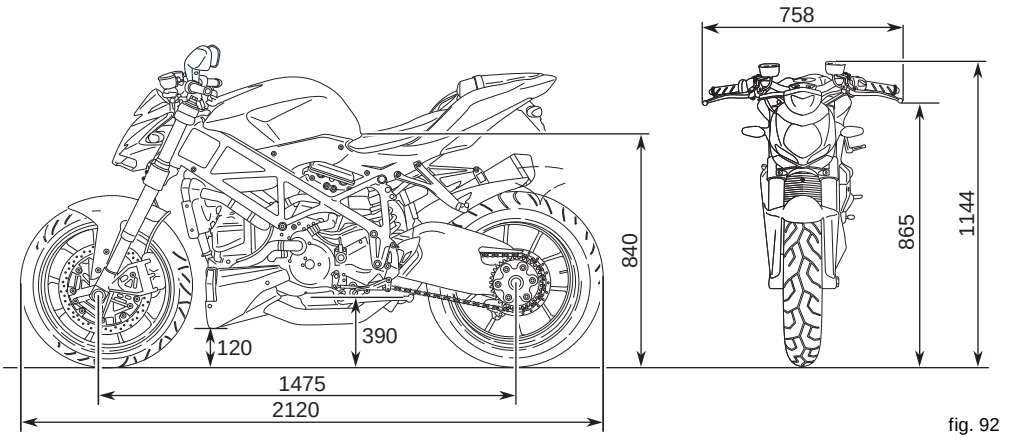

fig. 92

TOP-UPS	TYPE	
Fuel tank, including a reserve of 2 cu dm (litres)	Unleaded fuel with 95 fuel octane rating (at least)	17 cu dm (liters).
Lubrication circuit	SHELL - Advance Ultra 4	3.7 cu. dm (litres).
Clutch and front/rear brake systems	Special hydraulic fluid SHELL Advance Brake Dot 4	—
Protectant for electric contacts	SHELL - Advance Contact Cleaner spray for electrical systems	—
Front fork for Streetfighter only	SHELL - Advance Fork 7.5 or Donax TA	439 cc (per leg)
Front fork for Streetfighter S only	SHELL - Advance Fork 7.5 or Donax TA	155 mm (per leg) oil level height
Cooling circuit	Antifreeze SHELL - Advance Coolant or Glycoshell 35-40% + water	2.3 cu. dm (litres).

Important
Do not use any additives in fuel or lubricants.

E

Engine

Twin cylinder, four-stroke, 90° "L" type, longitudinal.
Bore, mm:
104
Stroke, mm:
64.7
Total displacement, cu. cm:
1099.24
Compression ratio:
12.5±0.5:1
Max crankshaft power (95/1/CE), kW/HP:
114 kW/155 HP at 9,500 rpm
Max torque at crankshaft (95/1/CE):
11.7 Kgm/114.6 Nm at 9,500 rpm
Maximum rpm:
10,700 rpm

Important

Do not exceed the specified rpm limits in any running conditions.

Timing system

DESMODROMIC (type) with four valves per cylinder, operated by eight rocker arms (4 opening rockers and 4 closing rockers) and two overhead camshafts. It is operated by the crankshaft through spur gears, belt rollers and toothed belts.

Desmodromic timing system (fig. 93)

1) Opening (or upper) rocker.
2) Opening rocker shim.
3) Closing (or lower) rocker shim.
4) Return spring for lower rocker.
5) Closing (or lower) rocker.
6) Camshaft.
7) Valve.

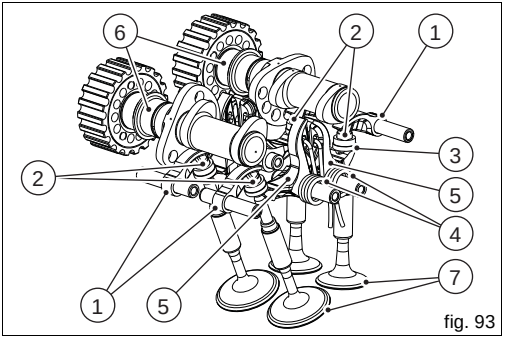

fig. 93

Performance data

Maximum speed in any gear should be reached only after a correct running-in period with the motorcycle properly serviced at the recommended intervals.

Important

Failure to follow these instructions will release Ducati Motor Holding S.p.A. from any liability for any engine damage or shortened engine life.

Spark plugs

Make:
NGK
Type:
MAR10A-J

Fuel system

MARELLI indirect electronic fuel injection.
Throttle body diameter:
63.9 mm
Injectors per cylinder: 1
Firing points per injector: 12
Fuel specifications: 95-98 RON.

Brakes

Front

Semi-floating drilled twin-disc.
Braking material:
steel.
Carrier material:
aluminium.
Disc diameter:
330 mm.
Hydraulically operated by a control lever on right handlebar.
Brake caliper make:
BREMBO.
Type:
34-4 pistons
M4-34.
Friction material:
TT 2910
Master cylinder type:
PR18/19.

Rear

With fixed drilled steel disc.
Disc diameter:
245 mm.
Hydraulically operated by a pedal on RH side.
Make:
BREMBO
Type:
P34c pistons.
Friction material:
FERIT I/D 450 FF
Master cylinder type:
PS 11 b.

Warning

The brake fluid used in the brake system is corrosive. In the event of accidental contact with eyes or skin, wash the affected area with abundant running water.

Transmission

Dry clutch operated by a control lever on left handlebar.
Drive is transmitted from engine to gearbox main shaft via spur gears.
Front chain sprocket/clutch gearwheel ratio:
32/59
6-speed gearbox with constant mesh gears, gear change pedal on left side of motorcycle.
Gearbox output sprocket/rear chain sprocket ratio:
15/38
Total gear ratios:
1st gear 37/15
2nd gear 30/17
3rd gear 28/20
4th gear 26/22
5th gear 24/23
6th gear 23/24

Drive chain from gearbox to rear wheel:
Make:
DID
Type:
525 HV 2
Dimensions:
5/8“x5/16“
Links:
101+1 open link.

Important

The above gear ratios are the homologated ones and under no circumstances must they be modified.

However, if you wish to tune up your motorcycle for competitions or special tracks, Ducati Motor Holding S.p.A. will be pleased to provide information about the special ratios available. please contact a Ducati Dealer or Authorised Service Centre.

Warning

If the rear sprocket needs replacing, contact a Ducati Dealer or authorised Service Center. If improperly replaced, this component could seriously endanger your safety and cause irreparable damage to your motorcycle.

Frame

ALS450 steel tubular trellis frame.
Steering angle (on each side):
30°

Wheels

Ten Y-shaped spoke light alloy wheel rims (Streetfighter).
Five Y-shaped spoke light alloy wheel rims (Streetfighter S).

Front

Dimensions:
MT 3.50x17“.

Rear

Dimensions:
MT 6.00x17“.

Both wheel shafts can be removed.

Tyres

Front

Tubeless, radial tyre.
Size:
120/70-ZR17

Rear

Tubeless, radial tyre.
Size:
190/55-ZR17

Suspensions

Front

Hydraulic upside-down fork provided with outer adjusters for rebound, compression, and preload (for inner springs of fork legs).
Stanchion diameter:
43 mm, TIO-coated.
Travel along leg axis:
127 mm (Streetfighter);
120 mm (Streetfighter S).

Rear

Of the progressive type, thanks to a rocker arm connecting frame and upper pivot point of the shock absorber.
The shock absorber allows rebound, compression damping and spring preload adjustment and is connected to a light alloy swingarm at the bottom pivot point. The swinging arm rotates around a pivot shaft that passes through frame and engine.

The whole system gives the bike excellent stability.
Shock absorber stroke:
59.5 mm.
Wheel travel:
127 mm.

Exhaust system

Lightweight "2 into 1 into 2" exhaust system, with catalytic converter and lambda sensor. Two stainless steel silencers.

Available colours

Streetfighter

Ducati Anniversary red 473.101 (PPG);
Clear coat 228.880 (PPG);
Racing black frame and Graphite Grey rims.

Pearl white Ducati Streetfighter part no. L2909004 (LECLHER);
Clear coat 228.880 (PPG);
Racing black frame and Graphite Grey rims.

Streetfighter S

Ducati Anniversary red 473.101 (PPG);
Clear coat 228.880 (PPG);
bronze frame and rims.

Diamond black;
Clear coat 228.880 (PPG);
Racing black frame and Graphite Grey wheel rims.

Electric system

Basic electric items are:
Headlight:
bulb type: 1 x H4 (12V-60/55W).
parking light: LED (13.5V - 6.1 W).
Electric controls on handlebar:
Turn indicators:
Front: bulb type: RY10W (12V-10W) AMBER
Rear: bulb type: RY10W (12V-10W) AMBER
Horn.
Stop light switches.
Battery 12V-10 Ah.
GENERATOR 12V-360W.
ELECTRONIC RECTIFIER, protected by a 30A fuse located on remote control switch, fixed to left-hand side rear subframe (12, fig. 96).
Starter motor, 12V-0.7 kW.
Tail light and brake signal:
LED (13.5V - 0.3/3.8W).
Number plate light:
bulb type: C5W (12-5 W).



Note

See "Replacing the high and low beam bulbs" on page 94 for relevant instructions.

E

Fuses

Electrical parts are protected by nine fuses housed inside special fuse boxes. Only 7 fuses are connected. There are two spare fuses.
Refer to the table to identify their use and amperage.

KEY TO FUSE BOXES (fig. 94)

Pos.	El. item	Rat.
1	Key-on	10 A
2	Fan	7.5 A
3	Lights	15 A
4	Dashboard	5 A
5	Injection	20 A
6	ECU (engine control unit)	5 A
7	Spare	20 A
8	Spare	15 A

The main fuse box (9, fig. 94) is located under the rider seat, (10, fig. 95). Unscrew the screws (11, fig. 95) securing the rider seat to subframe. Remove the rider seat (10, fig. 95) from the vehicle by slightly pulling it back and up. To expose the fuses, take off the box protective cover. Mounting position and ampere capacity are marked on box cover.

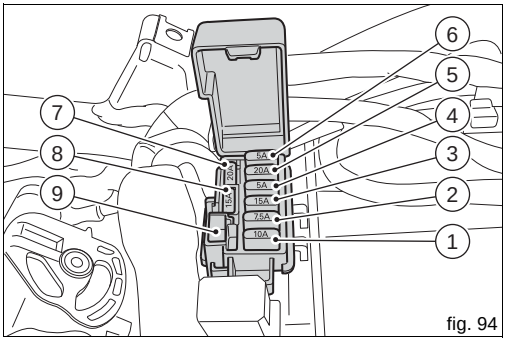

fig. 94

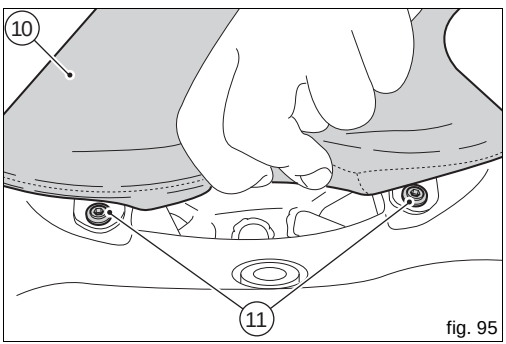

fig. 95

Fuse (12, fig. 96) protects the electronic regulator.

Important
Have the fuse (12, fig. 96) replaced at a Ducati Dealer or authorised Service Center.

A blown fuse is identified by the interrupted centre link (13, fig. 97).

Important
Switch the ignition key to OFF before replacing the fuse to avoid possible short-circuits.

Warning
Never use a fuse with a rating other than specified. Failure to observe this rule may damage the electric system or even lead to fire.

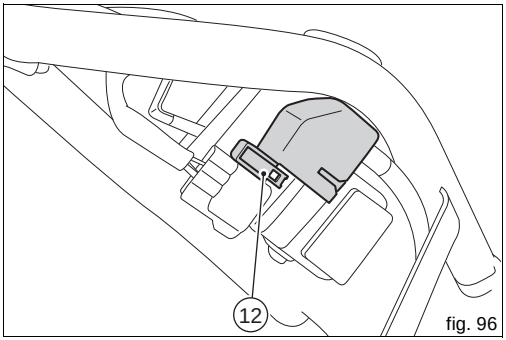

fig. 96

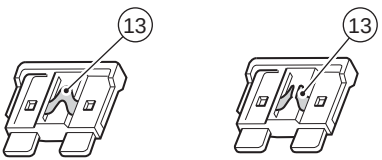

fig. 97

Injection /electric system diagram key

1) RH switch
2) Ignition switch
3) LH fan
4) RH fan
5) Starter motor
6) Solenoid starter
7) Battery
8) Regulator fuse
9) Regulator
10) Generator
11) RH rear turn indicator
12) Rear tail light
13) Number plate light
14) LH rear turn indicator
15) Fuel tank
16) Stepper motor
17) Injection relay
18) Self-diagnosis
19) Horizontal cylinder coil
20) Vertical cylinder coil
21) Horizontal cylinder spark plug
22) Vertical cylinder spark plug
23) Horizontal cylinder injector 1
24) Vertical cylinder injector 1
25) Throttle position sensor
26) Timing/rpm sensor
27) Water temperature sensor
28) Rear speed sensor
29) Side stand
30) Horn
31) Neutral switch
32) Oil pressure switch
33) Rear stop switch
34) ECU
35) Fuses
36) Clutch switch
37) Front stop switch
38) Lh switch
39) Transponder antenna
40) Air temperature sensor
41) Finish line
42) Dashboard
43) Light relay
44) LH front turn indicator
45) Headlight
46) Front RH parking light
47) RH front turn indicator
48) EX-UP drive
49) Fan relay
50) Front LH parking light
51) Data logger
52) Lambda sensor 1
53) Horizontal cylinder injector 2
54) Vertical cylinder injector 2
55) Lambda sensor 2
56) Ignition relay
57) DTC
58) Front speed sensor

Wire colour coding

B Blue
W White
V Violet
BK Black
Y Yellow
R Red
LB Light blue
GR Grey
G Green
BN Brown
O Orange
P Pink

Note

The system wiring diagram is at the end of this manual.

Routine maintenance record

KM	DUCATI SERVICE	MILEAGE	DATE
1000			
12000			
24000			
36000			
48000			
60000			

For United States of America version Only

Reporting of safety defects

If you believe that your vehicle has a defect which could cause a crash or could cause injury or death, you should immediately inform the National Highway Traffic Safety Administration (NHTSA) in addition to notifying Ducati North America. If NHTSA receives similar complaints, it may open an investigation, and if it finds that a safety defect exists in a group of vehicles, it may order a recall and remedy campaign. However, NHTSA cannot become involved in individual problems between you, your dealer, or Ducati North America. To contact NHTSA, you may either call the Auto Safety Hotline toll-free at 1-800-424-9393 (or 366-0123 in Washington, D.C. area) or write to: NHTSA, 1200 New Jersey Avenue SE W43-488, Washington, D.C. 20590. You can also obtain other information about motor vehicle safety from the Hotline.

Safety warnings

Traffic Rules vary from jurisdiction to jurisdiction. Know the regulations in your jurisdiction before riding this motorcycle.

Warning

This motorcycle is designed and intended for use on streets and other smooth, paved areas only. Do not use this motorcycle on unpaved surfaces. Such use could lead to upset or other accident.

Noise emission warranty

Ducati Motor S.p.A. warrants that this exhaust system, at the time of sale, meets all applicable U.S. EPA Federal noise standards. This warranty extends to the first person who buys this exhaust system for purposes other than resale, and to all subsequent buyers. Warranty claims should be directed to: Ducati North America,
10443 Bandley Drive, Cupertino, California, 95014
Tel: 001.408.253.0499 - Fax: 001.408.253.4099.

Noise and exhaust emission control system information

Source of Emissions

The combustion process produces carbon monoxide and hydrocarbons. Control of hydrocarbons is very important because under certain conditions, they react to form photochemical smog when subjected to sunlight.

Carbon monoxide does not react in the same way, but is toxic. Ducati utilizes lean carburetor settings and other systems to reduce carbon monoxide and hydrocarbons.

Exhaust Emission Control System

The Exhaust Emission Control System is composed of lean carburetor settings, and no adjustments should be made except idle speed adjustments with the throttle stop screw. The Exhaust Emission Control System is separate from the crankcase emission control system.

Crankcase Emission Control System

The engine is equipped with a closed crankcase system to prevent discharging crankcase emissions into the atmosphere. Blow-by gas is returned to the combustion chamber through the air cleaner and the throttle body.
Evaporative Emission Control System
California motorcycles are equipped with an evaporative emission control system which consists of a charcoal canister and associated piping. This system prevents the escape of fuel vapors from the throttle body and fuel tank.

Tampering warning

Tampering with Noise Control System Prohibited. Federal Law prohibits the following acts or causing thereof:
(1) the removal or rendering inoperative by any person, other than for purposes of maintenance, repair, or replacement, of any device or element of design incorporated into any new vehicle for the purpose of noise control prior to its sale or delivery to the ultimate purchaser or while it is in use; or
(2) the use of the vehicle after such device or element of design has been removed or rendered inoperative by any person.

Among those acts presumed to constitute tampering are the acts listed below:

(1) Removal of, or puncturing the muffler, baffles, header pipes or any other component which conducts exhaust gases.
(2) Removal or puncturing of any part of the intake system.
(3) Lack of proper maintenance.
(4) Replacing any moving part of the vehicle, or parts of the exhaust or intake system, with parts other than those specified by the manufacturer.
This product should be checked for repair or replacement if the motorcycle noise has increased significantly through use. Otherwise, the owner may become subject to penalties under state and local ordinances.

Problems that may affect motorcycle emissions

If you are aware of any of the following symptoms, have the vehicle inspected and repaired by your local Ducati dealer.
Symptoms:
Hard starting or stalling after starting.
Rough idle.
Misfiring or backfiring during acceleration.
After-burning (backfiring).
Poor performance (driveability) and poor economy.

Riding safety

The points given below are applicable for every day motorcycle use and shoud be carefully observed for safe and effective vehicle operation.
A motorcycle does not provide the impact protection of an automobile, so defensive riding in addition to wearing protective apparel is extremely important.
Do not let protective apparel give you a false sense of security.
Before changing lanes, look over your shoulder to make sure the way is clear. Do not rely solely on the rear view mirror; you may misjudge a vehicle's distance and speed, or you may not see it at all.
When going up steep slopes, shift to a lower gear so that there is plenty of power to spare rather than overloading the engine.
When applying the brakes, use both the front and rear brakes. Applying only one brake for sudden braking may cause the motorcycle to skid and lose control.
When going down long slopes, control vehicle speed by closing the throttle. Use the front and rear brakes for auxiliary braking.
Riding at the proper rate of speed and avoiding unnecessarily fast acceleration are important not only for safety and low fuel consumption but also for long vehicle life and quieter operation.
When riding in wet conditions or on loose roadway surfaces, the ability to maneuver will be reduced. All of your actions should be smooth under these conditions. Sudden acceleration, braking or turning may cause loss of control.
When the roadway is wet, rely more on the throttle to control vehicle speed and less on the front and rear brakes.
The throttle should also be used judiciously to avoid skidding the rear wheel from too rapid acceleration or deceleration.
On rough roads, exercise caution, slow down, and grip the fuel tank with your knees for better stability.
When quick acceleration is necessary as in passing, shift to a lower gear to obtain the necessary power.
Do not down shift at too high an r.p.m. to avoid damage to the engine from overreving.
Avoiding unnecessary weaving is important to the safety of both the rider and other motorists.
Do not exceed the legal speed limit or drive too fast for existing conditions. High speed increases the influence of any condition affecting stability and the loss of control.
Operate motorcycle only at moderate speed and out of traffic until you have become thoroughly familiar with its operation and handling characteristics under all conditions. This is a very high performance motorcycle, designed and intended for use by experienced careful riders only!
A new motorcycle must be operated according to a special break-in procedure (see Running in recommendations).

Warning

Before starting engine, check for proper operation of brake, clutch, shifter, throttle controls, correct fuel and oil supply.
Gasoline is extremely flammable and is explosive under certain conditions. Refuell in a well ventilated area with the engine stopped. Do not smoke or allow open flames or sparks when refuelling or servicing the fuel system.

Always close the fuel petcock when the engine is not running to prevent flooding of the throttle body. Do not overfill fuel tank (see instructions page 55).
Motorcycle exhaust contains poisonous carbon monoxide gas. Do not inhale exhaust gases and never run the engine in a closed garage or confined area.
Use only Ducati approved parts and accessories.
This motorcycle was not intended to be equipped with a sidecar or to be used to tow any trailer or other vehicle. Ducati does not manufacture sidecars or trailers and cannot predict the effects of such accessories on handling or stability, but can only warn that the effects will be adverse and any damage to motorcycle components caused by the use of such accessories will not be remedied under warranty.

Warning

Do not ride the motorcycle with helmets attached to the hook; the helmets could cause an accident by distracting the operator or interfering with normal vehicle operation.

Protective apparel

Always wear a helmet. Most motorcycle accident fatalities are due to head injuries.
For safety eye protection, gloves, and high top, sturdy boots should also be worn.
The exhaust system becomes very hot during operation, never touch the exhaust system. Wear clothing that fully covers your legs. Do not wear loose clothing which could catch on the control levers, footrests, wheels, or chain.

Any amount of alcohol will significantly interfere with your ability to safely operate your motorcycle. Don't drink and ride.

Vehicle identification number (VIN);

Every Ducati motorcycle is identified by two identification numbers (see page 10). fig. A specifically shows the frame identification numbers.

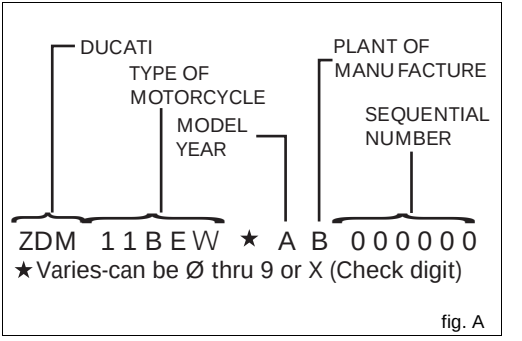

fig. A

Label location (fig. B)

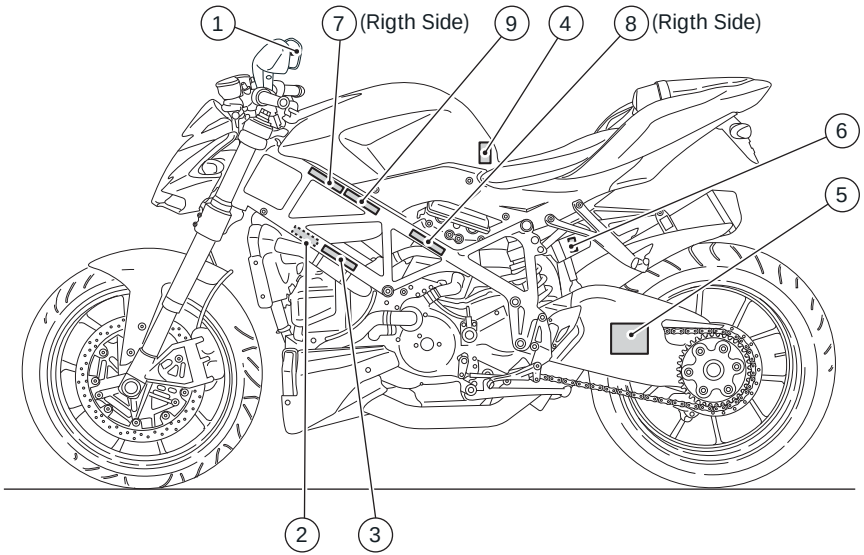

fig. B

WARNING
DO NOT ATTEMPT TO LOOK THROUGH THIS FAIRING. THIS IS NOT A WINDSHIELD, BUT AN AERODYNAMIC FAIRING ONLY. FAILURE TO OBSERVE THIS WARNING COULD RESULT IN A COLLISION OR UPSET AND CONSEQUENT SERIOUS BODILY INJURY.

1

Manufactured by **DUCATI***MOTOR*HOLDING *spa* DATE: /

GVWR: Lbs (kg)
GAWR front: Lbs (kg) with tire, RIM at PSI cold.
GAWR rear: Lbs kg) with tire, RIM at PSI cold.
This vehicle conforms to all applicable Federal Motor Vehicle Safety standards in effect on the date of manufacture shown above. Type classification: Motorcycle

Vehicle I.D. No.:

2

MANUFACTURED BY / FABRIQUÉ PAR : **DUCATI***MOTORHOLDING spa*
TYPE OF VEHICLE / TYPE DE VÉHICULE : MC DATE : **/****
GVWR / PNBV *** KG. V.I.N. / N.I.V. : ZDM**********

GAWR / PNBE RG	TIRE/PNEU - DIMENSION - PNEUMANTE	COLD INFL. PRESS. PRESS DE GONFL. A FROID PSI/LPC KPA	
***	***/********	********	*** ***
***	***/********	********	*** ***

THIS VEHICLE CONFORMS TO ALL APPLICABLE STANDARDS PRESCRIBED UNDER THE CANADIAN MOTOR VEHICLE SAFETY REGULATIONS IN EFFECT ON THE DATE OF MANUFACTURE.
CE VÉHICULE EST CONFORME A TOUTES LES NORMES QUI LUI SONT APPLICABLES EN VERTU DU REGLEMENT SUR LA SECURITE DES VEHICULES AUTOMOBILES DU CANADA EN VIGUEUR A LA DATE DE SA FABRICATION. *** * *** **

3 (Only Canada)

CAUTION
NEVER FILL TANK SO FUEL LEVEL RISES INTO FILLER NECK. IF TANK IS OVERFILLED, HEAT MAY CAUSE FUEL TO EXPAND AND FLOW INTO EVAPORATIVE EMISSION CONTROL SYSTEM RESULTING IN HARD STARTING AND ENGINE HESITATION.

4

Tensione catena (sul cavalletto laterale)
Chain Tension Adjustment (on side stand)

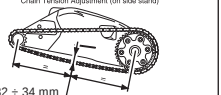

32 ÷ 34 mm

5

WARNING
CONTAINS HIGHLY COMPRESSED GAS. USE ONLY PERFECTLY DRY NITROGEN GAS, OTHER GASES MAY CAUSE EXPLOSION. DO NOT INCINERATE. REFER TO OWNER'S MANUAL FOR REGULATING GAS.

6

VEHICLE EMISSION CONTROL LABEL

ENGINE DISPLACEMENT: ENGINE FAMILY:
THIS VEHICLE CONFORMS TO U.S. EPA AND CALIFORNIA REGULATIONS APPLICABLE TO MODEL YEAR NEW MOTORCYCLES.
EVAP FAMILY:



DUCATI
Via A. C. Ducati, 3
40132 BOLOGNA
ITALY

7

VEHICLE EMISSION CONTROL INFORMATION

Engine displacement: cc
Engine family:
Engine exhaust control system:

THIS VEHICLE CONFORMS TO U.S. EPA REGULATIONS APPLICABLE TO MODEL YEAR NEW MOTORCYCLES

ENGINE TUNE-UP SPECIFICATIONS

ITEM	SPECIFICATIONS	INSTRUCTIONS
IGNITION TIMING:	BTDC at idle speed	No adjustment
IDLE SPEED (RPM):	mm	No adjustment
IDLE MIXTURE:		No adjustment
	Opening ± mm	
VALVE CLEARANCE (in & ex):		See Service Manual
	Closing ± mm	
SPARK PLUG: CHAMPION		
SPARK PLUG GAP (mm):	OIL:	
	FUEL: Unleaded gasoline	

DUCATI*MOTOR*HOLDING *spa* - BOLOGNA - ITALY

8

MOTORCYCLE NOISE EMISSION CONTROL INFORMATION

THIS MOTORCYCLE,
MEETS EPA NOISE EMISSION REQUIREMENTS OF dBA AT RPM BY THE FEDERAL TEST PROCEDURE.
MODIFICATIONS WHICH CAUSE THIS MOTORCYCLE TO EXCEED FEDERAL NOISE STANDARDS ARE PROHIBITED BY FEDERAL LAW.
SEE OWNER'S MANUAL.

9

California emission control warranty statement
Your warranty rights and obligations

The California Air Resources Board is pleased to explain the emission control system warranty on your MY 2011 motorcycle. In California, new motor vehicles must be designated, built and equipped to meet the State's stringent anti-smog standards. Ducati North America, Inc. must warrant the emission control system on your motorcycle for the periods of time listed below provided there has been no abuse, neglect or improper maintenance of your motorcycle. Your emission control system may include parts such as fuel-injection system, the ignition system, catalytic converter, and engine computer. Also included may be hoses, belts, connectors and other emission-related assemblies. Where a warrantable condition exists, Ducati North America, Inc. will repair your motorcycle at no cost to you including diagnosis, parts and labor.

Manufacturer's warranty coverage

- 5 years or 30,000 kilometers (18641 miles), whichever first occurs.

Owner's warranty responsibilities:

- As the motorcycle owner, you are responsible for the performance of the required maintenance listed in your owner's manual. Ducati North America, Inc. recommends that you retain all receipts covering maintenance on your motorcycle, but Ducati North America, Inc. cannot deny warranty solely for the lack of receipts or for your failure to ensure the performance of all scheduled maintenance.
- You are responsible for presenting your motorcycle to a Ducati dealer as soon as a problem exists. The warranty repairs should be completed in a reasonable amount of time, not to exceed 30 days.
- As the motorcycle owner, you should also be aware that Ducati North America, Inc. may deny you warranty coverage if your motorcycle or a part has failed due to abuse, neglect, improper maintenance or unapproved modifications.

If you have any questions regarding your warranty rights and responsibilities, you should contact Ducati North America, Inc. at 001.408.253.0499 or the California Air Resource Board at 9528 Telstar Avenue, El Monte, CA 91731.

California evaporation emission system

This system consists of (fig. C):

1) Warn air inlet;
2) Canister;
3) Dell'Orto jet;
4) Fuel tank;
5) Breather pipe;
6) Intake manifolds.

Important

In the event of fuel system malfunction, contact Ducati's authorized Service Centres.

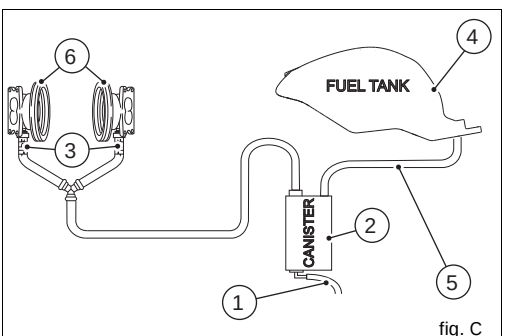

fig. C

Ducati limited warranty on emission control system

Ducati North America, Inc., 10443 Bandley Drive Cupertino, California, 95014 warrants that each new 1998 and later Ducati motorcycle, that includes as standard equipment a headlight, tail-light and stoplight, and is street legal:
A) is designed, built and equipped so as to conform at the time of initial retail purchase with all applicable regulations of the United States Environmental Protection Agency, and the California Air Resources Board; and
B) is free from defects in material and workmanship which cause such motorcycle to fail to conform with applicable regulations of the United States Environmental Protection Agency or the California Air Resources Board for a period of use of 30,000 kilometers (18,641 miles) or 5 (five) years from the date of initial retail delivery, whichever first occurs.

I. Coverage

Warranty defects shall be remedied during customary business hours at any authorized Ducati motorcycle dealer located within the United States of America in compliance with the Clean Air Act and applicable regulations of the United States Environmental Protection Agency and the California Air Resources Board. Any part or parts replaced under this warranty shall become the property of Ducati.

In the state of California only, emissions related warranted parts are specifically defined by that state's Emissions Warranty Parts List. These warranted parts are: carburetor and internal parts; intake manifold; fuel tank, fuel injection system; spark advance mechanism; crankcase breather; air cutoff valves; fuel tank cap for evaporative emission controlled vehicles; oil filler cap; pressure control valve; fuel/vapor separator; canister; igniters; breaker governors; ignition coils; ignition wires; ignition points, condensers, and spark plugs if failure occors prior to the first scheduled replacement, and hoses, clamps, fittings and tubing used directly in these parts. Since emission related parts may vary from model to model, certain models may not contain all of these parts and certain models may contain functionally equivalent parts.
In the state of California only, Emission Control System emergency repairs, as provided for in the California Administrative Code, may be performed by other than an authorized Ducati dealer. An emergency situation occurs when an authorized Ducati dealer is not reasonably available, a part is not available within 30 days, or a repair is not complete within 30 days. Any replacement part can be used in an emergency repair. Ducati will reimburse the owner for the expenses, including diagnosis, not to exceed Ducati's suggested retail price for all warranted parts replaced and labor charges based on Ducati's recommended time allowance for the warranty repair and the geographically appropriate hourly labor rate. The owner may be required to keep receipts and failed parts in order to receive compensation.

II. Limitations

This Emission Control System Warranty shall not cover any of the following:
A. Repair or replacement required as a result of
(1) accident,
(2) misuse,
(3) repairs improperly performed or replacements improperly installed,
(4) use of replacement parts or accessories not conforming to Ducati specifications which adversely affect performance and/or
(5) use in competitive racing or related events.
B. Inspections, replacement of parts and other services and adjustments required for routine maintenance.
C. Any motorcycle on which odometer mileage has been changed so that actual mileage cannot be readily determined.

III. Limited liability

A. The liability of Ducati under this Emission Control Systems Warranty is limited solely to the remedying of defects in material or workmanship by an authorized Ducati motorcycle dealer at its place of business during customary business hours. This warranty does not cover inconvenience or loss of use of the motorcycle or transportation of the motorcycle to or from the Ducati dealer. Ducati shall not be liable for any other expenses, loss or damage, whether direct, incidental, consequential or exemplary arising in connection with the sale or use of or inability to use the Ducati motorcycle for any purpose. Some states do not allow the exclusion or limitation of any incidental or consequential damages, so the above limitations may not apply to you.

B. No express emission control system warranty is given by Ducati except as specifically set forth herein. Any emission control system warranty implied by law, including any warranty of merchantability or fitness for a particular purpose, is limited to the express emission control systems warranty terms stated in this warranty. The foregoing statements of warranty are exclusive and in lieu of all other remedies. Some states do not allow limitations on how long an implied warranty lasts so the above limitation may not apply to you.
C. No dealer is authorized to modify this Ducati Limited Emission Control Systems Warranty.

IV. Legal rights

This warranty gives you specific legal rights, and you may also have other rights which vary from state to state.
V. This warranty is in addition to the Ducati limited motorcycle warranty.

VI. Additional information

Any replacement part that is equivalent in performance and durability may be used in the performance of any maintenance or repairs. However, Ducati is not liable for these parts. The owner is responsible for the performance of all required maintenance. Such maintenance may be performed at a service establishment or by any individual. The warranty period begins on the date the motorcycle is delivered to an ultimate purchaser.

Ducati North America, Inc..
10443 Bandley Drive
Cupertino, California, 95014
Tel: 001.408.253.0499
Fax: 001.408.253.4099
E-mail: customerservice@ducatiusa.com
Web site: www.ducatiusa.com

Routine maintenance record

KM	MI	DUCATI SERVICE NAME	MILEAGE	DATE
1,000	600			
12,000	7,500			
24,000	15,000			
36,000	22,500			
48,000	30,000			
60,000	37,500			

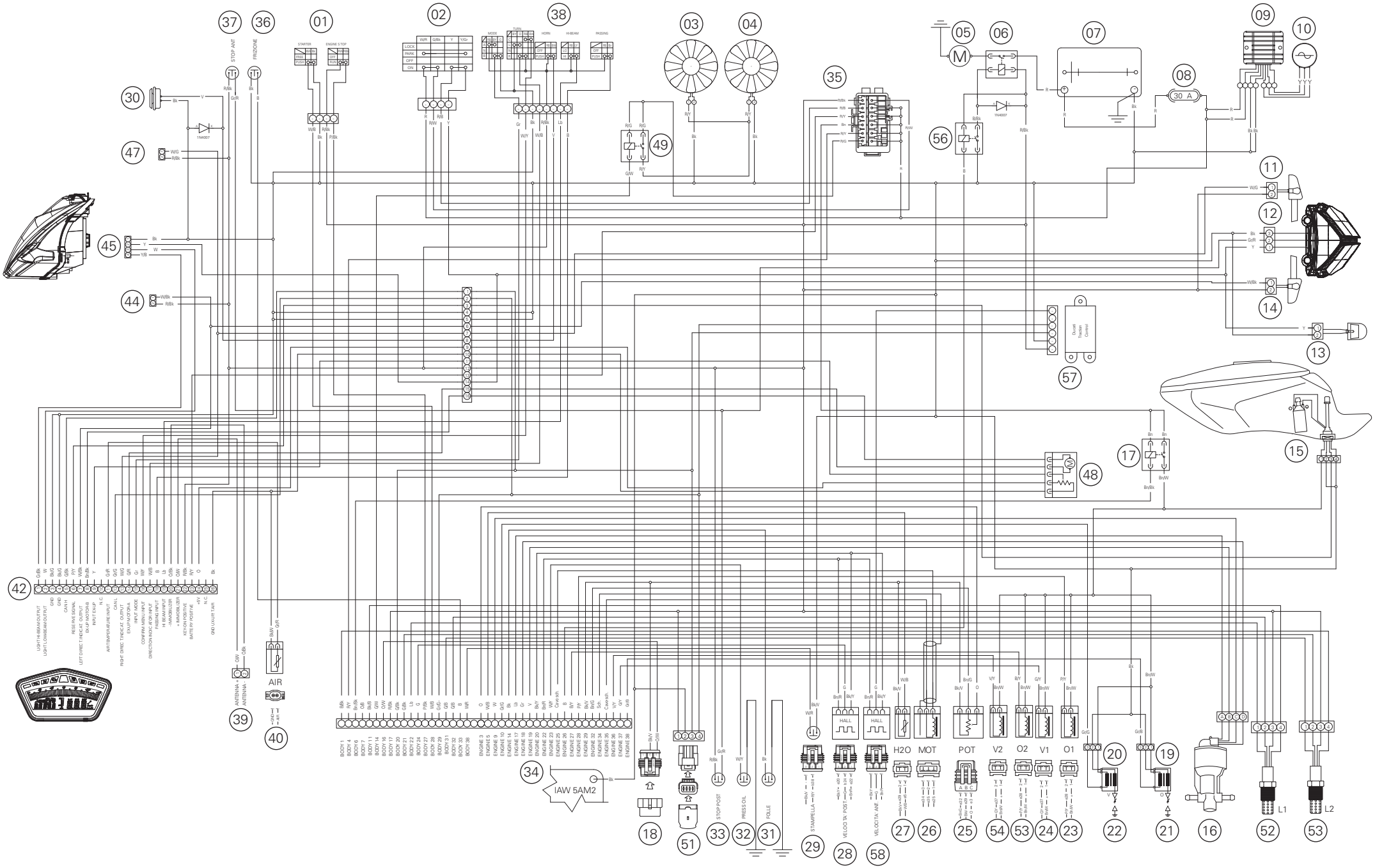

STREETFIGHTER / STREETFIGHTER S

Stampato 04/2011 Cod. 913.7.114.1S

Ducati Motor Holding spa
www.ducati.com

Via Cavalieri Ducati, 3
40132 Bologna, Italia
Tel. +39 051 6413111
Fax +39 051 406580

cod 913.7.114.1S